SICK.COM

DATA SHEET

UC30-215162

UC30
Ultrasonic distance sensors

SICK Sensor Intelligence

ULTRASONIC DISTANCE SENSORS

UC30-215162

ORDERING INFORMATION

Type	part no.
UC30-215162	6054715

Further device versions and accessories at www.sick.com/UC30

DETAILED TECHNICAL DATA

FEATURES

Operating range, limiting range	600 mm ... 6,000 mm, 8,000 mm
Resolution	≥ 0.18 mm
Repeatability	± 0.15 % [1]
Measurement accuracy	± 1 % [2] [3]
Temperature compensation	✓
Response time	240 ms
Switching frequency	3 Hz
Output time	60 ms
Ultrasonic frequency (typical)	80 kHz
Detection area (typical)	See diagrams
Additional function	Adjustable operating modes: Switching point (DtO) / Switching window/Background (ObSB), teach-in of digital output, set levels of digital outputs, invertable digital output, set on delay digital output, synchronization of up to 50 sensors, multiplexing: no cross talk of up to 50 sensors, adjustable measurement filters: Measured value filters/Filter strength/Foreground suppression/Detection area/Sensitivity and sound beam, reset to factory default
Safety-related parameters	
$MTTF_D$	101 years
DC_{avg}	0%

[1] In relation to the current measured value, minimum value ≥ resolution.

[2] Referring to current measurement value.

[3] Temperature compensation can be switched off, without temperature compensation: 0.17 % / K.

INTERFACES

Digital output	
Number	2 [1]
Type	PNP

[1] PNP: HIGH = V_s - (< 2 V) / LOW = 0 V.

Maximum output current I_A	≤ 200 mA
Multifunctional input (MF)	1 x MF
Hysteresis	100 mm

[1] PNP: HIGH = V_S - (< 2 V) / LOW = 0 V.

ELECTRONICS

Supply voltage U_B	DC 9 V ... 30 V [1]
Power consumption	≤ 1.2 W [2]
Initialization time	< 450 ms
Display	2 x LED
Enclosure rating	IP65 / IP67
Protection class	III

[1] Limit values, reverse-polarity protected Operation in short-circuit protected network: max. 8 A, class 2.

[2] Without load.

MECHANICS

Dimensions (W x H x D)	62 mm x 62 mm x 37.2 mm [1] 62 mm x 62 mm x 36.7 mm [2]
Design	Rectangular
Sending axis	Straight
Housing material	Plastic (PBT/PET, ultrasonic transducer: polyurethane foam, glass epoxy resin)
Weight	240 g
Connection type	Male connector, M12, 5-pin

[1] Serial number S/N 240**5**xxxxx or higher.

[2] Up to serial number S/N 240**4**xxxxx.

AMBIENT DATA

Ambient temperature, operation	–25 °C ... +70 °C
Ambient temperature, storage	–40 °C ... +85 °C

CERTIFICATES

EU declaration of conformity	✓
UK declaration of conformity	✓
ACMA declaration of conformity	✓
Moroccan declaration of conformity	✓
China RoHS	✓
China Compulsory Product Certification (CCC) exempt	✓
cULus certificate	✓

DIMENSIONAL DRAWING | SERIAL NUMBER S/N 240<B>5</B>XXXXX OR HIGHER

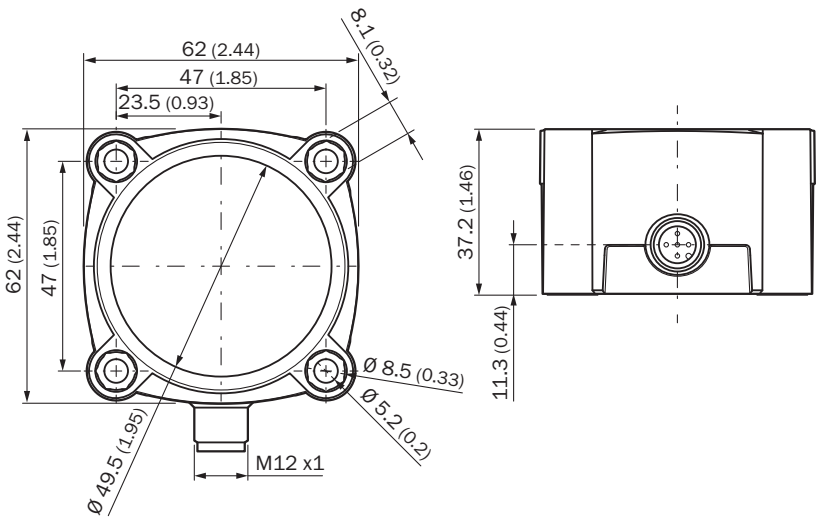

Dimensions in mm (inch)
Note: The position of the screw head in the hole is now 12 mm deeper, please check the screw length.

CONNECTION TYPE

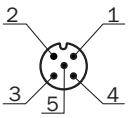

CONNECTION DIAGRAM

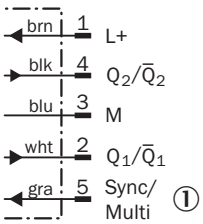

① Synchronization and multiplex mode, Connect+ communication

ADJUSTMENT POSSIBLE | SERIAL NUMBER S/N 240<B>5</B>XXXXX OR HIGHER

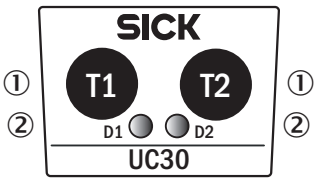

① Control elements
② LED status indicator

DETECTION AREA

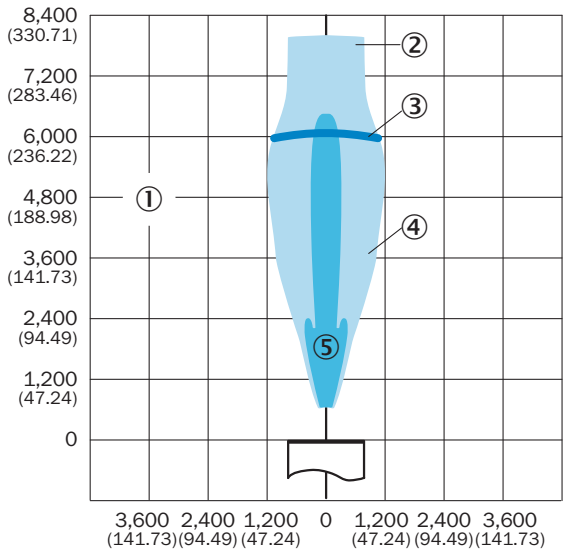

dimensions in mm (inch)
① Detection range dependent on reflection properties, size, and alignment of the object
② Limiting range
③ operating range
④ example object: aligned plate 500 mm x 500 mm
⑤ example object: pipe with 27 mm diameter

Further information as well as suitable accessories, example applications and downloads such as CAD dimensional models, operating instructions and software can be found at www.sick.com/6054715

SICK AG
WALDKIRCH
GERMANY
SICK.COM

SICK AT A GLANCE

SICK is a leading global technology company for intelligent sensors and integrated solutions in industrial automation. Our technologies set benchmarks, making your industrial processes more efficient, safer and more sustainable – both in logistics and manufacturing operations.

SICK combines sensor intelligence with industry expertise and certified consulting services. We provide the ideal foundation for scalable as well as tailor-made automation solutions and create added value along the entire value chain. Our close partnerships with our customers are more than just a promise: Together, we optimize productivity, improve quality, protect health and safety, and help build a sustainable future. All with empathy and trust.

Since 1946, we have been developing innovative technologies with passion and a pioneering spirit. With a global network in around 40 countries, SICK has a global presence and is always close by. The company's headquarters are located in Waldkirch near Freiburg, Germany. Our customers benefit from our understanding of both local and global requirements, which enables us to deliver tailor-made solutions

SICK
Sensor Intelligence