SICK.COM



DATA SHEET

V3S153-1AAAAAAP03

Visionary-B
3D machine vision

SICK Sensor Intelligence



Illustration may differ

3D MACHINE VISION

V3S153-1AAAAAAP03

ORDERING INFORMATION

Type	part no.
V3S153-1AAAAAAP03	1074002

Further device versions and accessories at www.sick.com/Visionary-B

DETAILED TECHNICAL DATA

FEATURES

Task	Position determination Collision awareness
Technology	3D snapshot stereoscopy
Product category	Configurable, Streaming, pre-calibrated
Working distance	0.5 m ... 6 m
Detection angle	105° x 90°
Illumination	No internal illumination necessary, works only with ambient light
Factory calibrated	✓
Detection zone	6 m × 7 m for standard configuration
Further functions	2D camera integrated
Description	2 x sensor head, 2 x evaluation unit, 2 x 7" monitor, assembly accessories

MECHANICS/ELECTRONICS

Connection type	1 x USB 2 x sensor head, male/female Monitor (VGA/sound) Additional alarm output; two discrete outputs Machine-to-machine interface (reserved) Ethernet (reserved) Evaluation unit supply
Supply voltage	12 V DC, - 10 % 24 V DC, + 40 %
Power consumption	≤ 80 W, Kit C
Enclosure rating	IP69K IP67
Weight	1.3 kg, sensor head 5 kg, evaluation unit
Mounting	Height 1 m ... 2.4 m, angle according to the detection zone

PERFORMANCE

Detectable object shape	See HMI and operating instruction
On delay	< 50 s
Response time	< 200 ms
Integrated application	3D driver assistance system for collision warning outdoors, image capturing option integrated

INTERFACES

Configuration software	Via provided monitor

AMBIENT DATA

Electromagnetic compatibility (EMC)	EN 55016-2-3:2010 + A1:2011 + A2:2014 (interference immunity) / EN 55012:2008-06 + A1:2009 (radiated emission)
Fulfilled standards	ISO 13766:2006-05 (earth-moving machinery), EN 12895:2015-09 (industrial trucks), EN 13309:2010-09 (construction machinery), ISO 14982:2009-02 (agricultural and forestry machinery), ISO 7637-2:2011-03, ISO 16750-2:2012-11, ISO16001:2017, EN 62311:2008, FCC PART 15:2006-08
Shock load	EN 60068-2-29:1994-01 (50 g / 6 ms)
Vibration load	EN 60068-2-64:2008-11 (5,9 g / 10 Hz - 2 kHz)
Ambient operating temperature	–40 °C ... +75 °C, sensor head –20 °C ... +40 °C, evaluation unit
Ambient light immunity	200 lx ... 80,000 lx

DIMENSIONAL DRAWING MONITOR

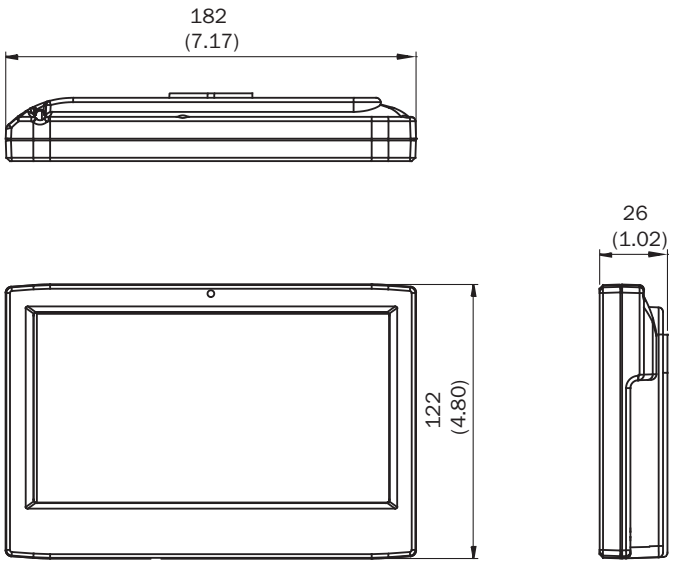

Dimensions in mm (inch)

DIMENSIONAL DRAWING EVALUATION UNIT

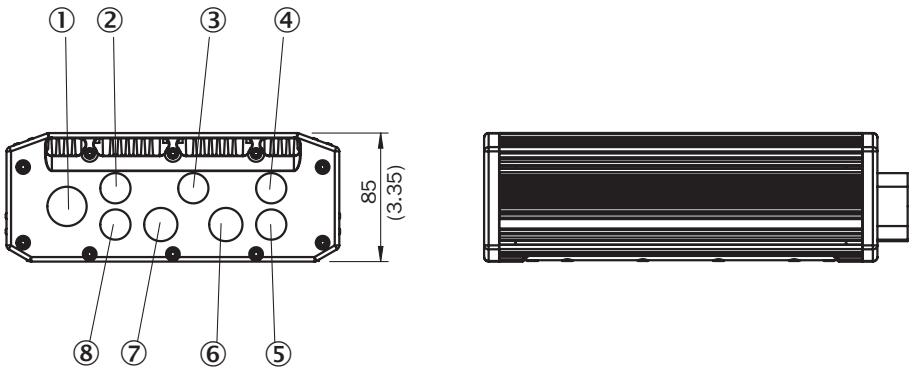

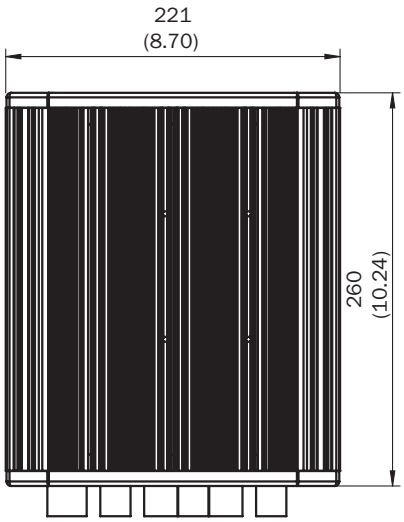

Dimensions in mm (inch)
① M20, USB
② M14, 6-pin power supply EU,12/24 V
③ M14, 9-pin machine interface (Kit C)
④ M14, 2-pin external power supply (reserved, not implemented)
⑤ M14, 4-pin, additional alarm output
⑥ Bayonet, 10-pin sensor head, female
⑦ Bayonet, 10-pin sensor head, male
⑧ M14, 9-pin VGA/sound

DIMENSIONAL DRAWING SENSOR HEAD

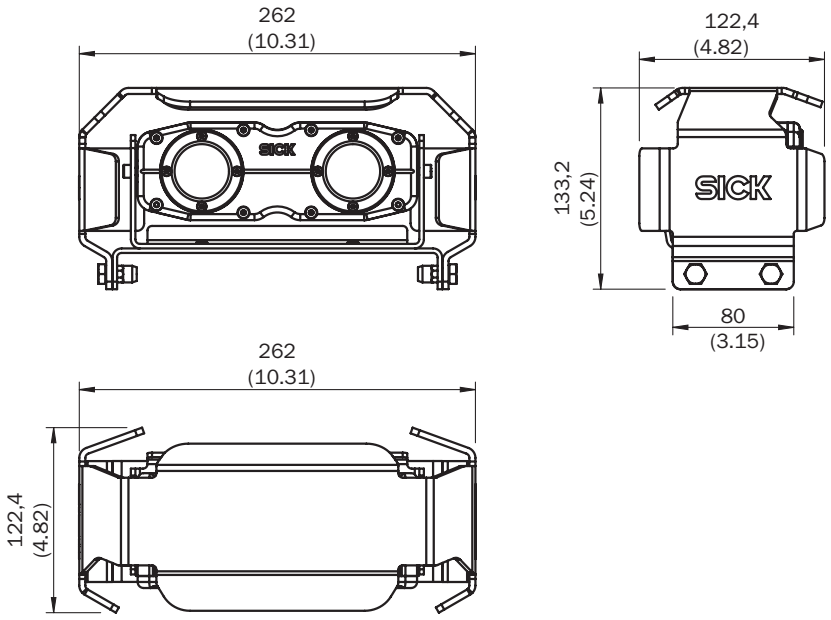

Dimensions in mm (inch)

FIELD OF VIEW

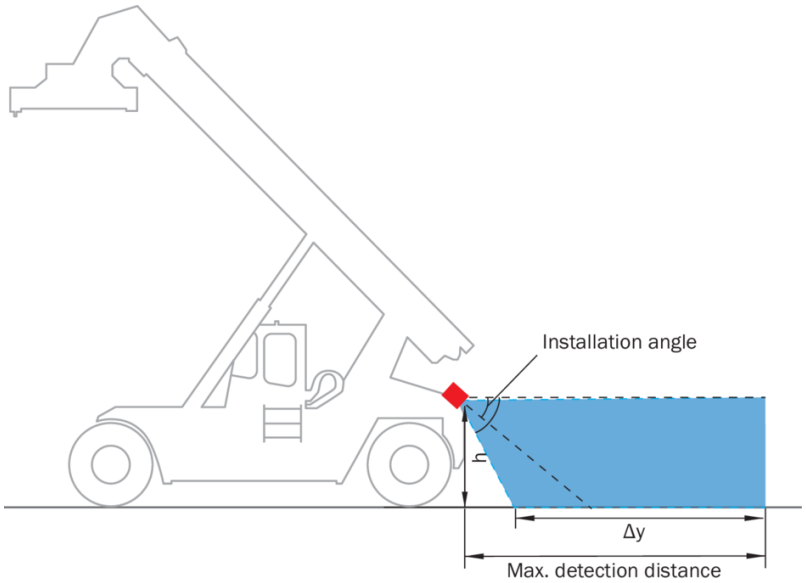

Mounting height (m)	1.0	1.2	1.4	1.6	1.8	2.0	2.2	2.4
Mounting angle (°)	0	-6	-11	-17	-23	-29	-31	-33

FIELD OF VIEW

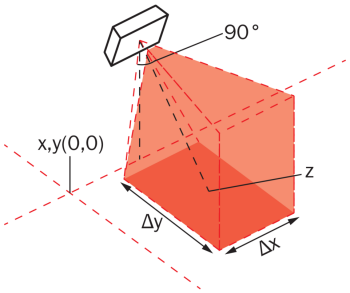

CONNECTION DIAGRAM KIT C

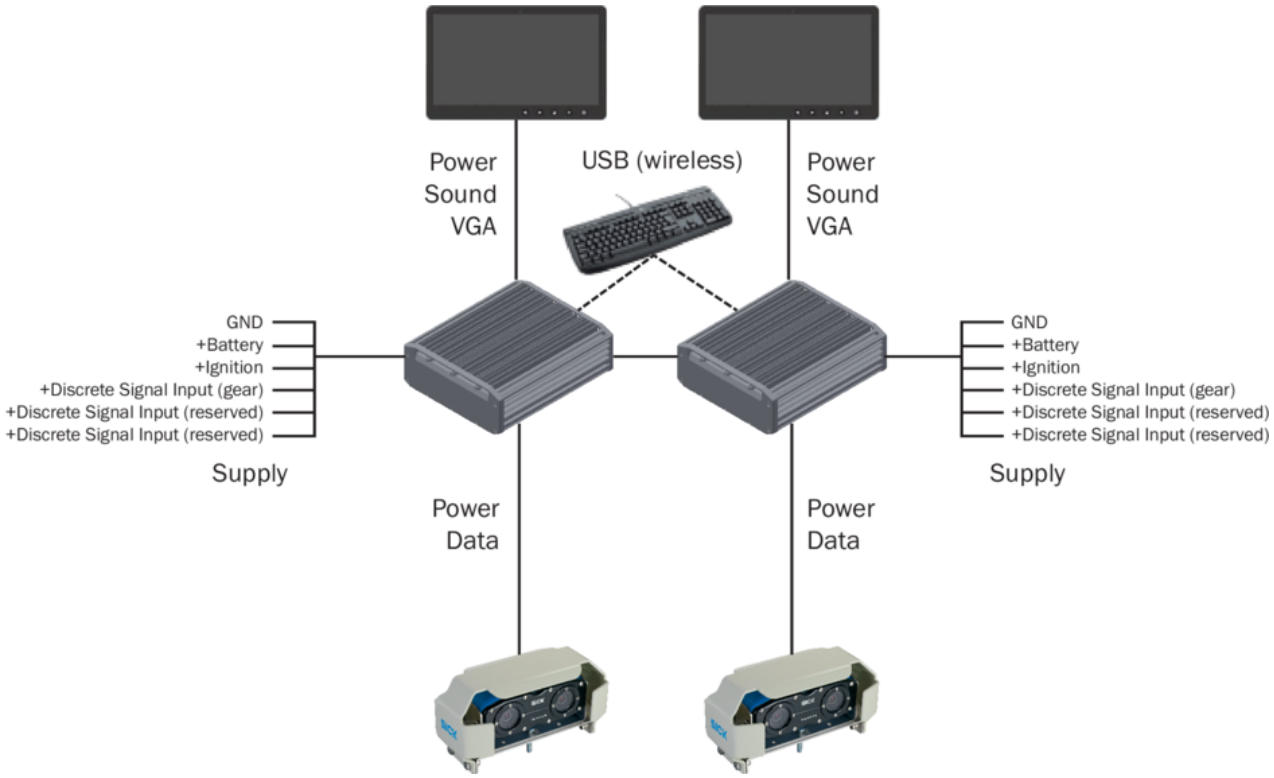

for extended field of view. Keyboard and cable sets are not included in any kit.

FUNCTIONAL PRINCIPLE DETECTION VOLUMES AND 2D MEASURING RANGES

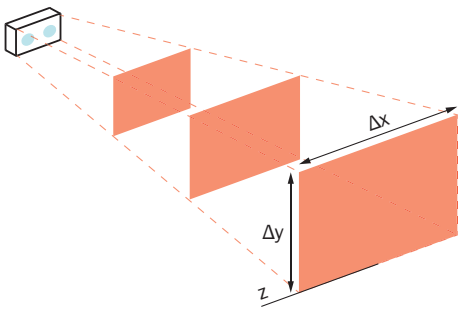

Working distance absolute (z)	Measuring range (Δx)	Measuring range (Δy)	2D image pixel size (x × y)
0.5 m	1.73 m	0.77 m	2 mm × 1 mm
1.0 m	3.46 m	1.53 m	4 mm × 3 mm
1.5 m	5.20 m	2.30 m	6 mm × 4 mm

Working distance absolute (z)	Measuring range (Δx)	Measuring range (Δy)	2D image pixel size (x × y)
2.0 m	6.93 m	3.07 m	8 mm × 6 mm
3.0 m	10.39 m	4.60 m	13 mm × 8 mm
4.0 m	13.86 m	6.14 m	17 mm × 11 mm
5.0 m	17.32 m	7.67 m	21 mm × 14 mm
10.0 m	34.64 m	15.35 m	42 mm × 28 mm
15.0 m	51.96 m	23.02 m	63 mm × 42 mm
20.0 m	69.28 m	30.69 m	84 mm × 56 mm
40.0 m	138.56 m	61.39 m	167 mm × 113 mm

Further information as well as suitable accessories, example applications and downloads such as CAD dimensional models, operating instructions and software can be found at www.sick.com/1074002

SICK AG
WALDKIRCH
GERMANY
SICK.COM

SICK AT A GLANCE

SICK is a leading global technology company for intelligent sensors and integrated solutions in industrial automation. Our technologies set benchmarks, making your industrial processes more efficient, safer and more sustainable – both in logistics and manufacturing operations.

SICK combines sensor intelligence with industry expertise and certified consulting services. We provide the ideal foundation for scalable as well as tailor-made automation solutions and create added value along the entire value chain. Our close partnerships with our customers are more than just a promise: Together, we optimize productivity, improve quality, protect health and safety, and help build a sustainable future. All with empathy and trust.

Since 1946, we have been developing innovative technologies with passion and a pioneering spirit. With a global network in around 40 countries, SICK has a global presence and is always close by. The company's headquarters are located in Waldkirch near Freiburg, Germany. Our customers benefit from our understanding of both local and global requirements, which enables us to deliver tailor-made solutions

SICK

Sensor Intelligence