SICK.COM

DATA SHEET

VT18-2T1112

V18
Photoelectric sensors

SICK Sensor Intelligence

Illustration may differ

PHOTOELECTRIC SENSORS

VT18-2T1112

ORDERING INFORMATION

Type	part no.
VT18-2T1112	6011370

Further device versions and accessories at www.sick.com/V18

DETAILED TECHNICAL DATA

FEATURES

Functional principle	Photoelectric proximity sensor
Functional principle detail	Energetic
Dimensions (W x H x D)	18 mm x 18 mm x 88 mm
Housing design (light emission)	Cylindrical
Housing length	88 mm
Thread diameter (housing)	M18 x 1
Optical axis	Axial
Sensing range max.	2 mm ... 100 mm [1]
Sensing range	3 mm ... 90 mm
Focus	Approx. 3.5°
Type of light	Infrared light
Light source	LED [2]
Light spot size (distance)	Ø 12 mm (100 mm)
Angle of dispersion	Approx. 3.5°
Adjustment	None

[1] Object with 90% remission (based on standard white, DIN 5033).

[2] Average service life: 100,000 h at T_U = +25 °C.

MECHANICS/ELECTRONICS

Supply voltage U_B	20 V AC ... 253 V AC [1]
Mains frequency	50 Hz, 60 Hz
Current consumption	30 mA [2]
Switching output	TRIAC
Switching mode	Light switching
Output current $I_{max.}$	≤ 300 mA [3]
Response time	≤ 20 ms [4]
Switching frequency	25 Hz [5]
Connection type	Cable, 3-wire, 2 m [6]
Cable material	Plastic, PVC
Conductor cross section	0.34 mm²
Cable diameter	Ø 4.7 mm
Circuit protection	C [7]
Protection class	II
Weight	95 g
Housing material	Plastic, PBT/PC
Optics material	Plastic, PMMA
Enclosure rating	IP67
Ambient operating temperature	–25 °C ... +70 °C
UL File No.	NMFT2.E175606

[1] Limit values.

[2] Without load.

[3] Depending on supply voltage VS.

[4] Signal transit time with resistive load.

[5] With light/dark ratio 1:1.

[6] Do not bend below 0 °C.

[7] C = interference suppression.

CERTIFICATES

EU declaration of conformity	✓
UK declaration of conformity	✓
ACMA declaration of conformity	✓
Moroccan declaration of conformity	✓
China RoHS	✓
China Compulsory Product Certification (CCC) exempt	✓
cRUus certificate	✓

CONNECTION TYPE

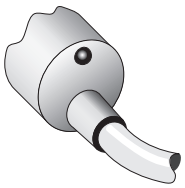

CONNECTION DIAGRAM CD-063

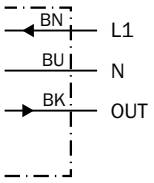

CHARACTERISTIC CURVE

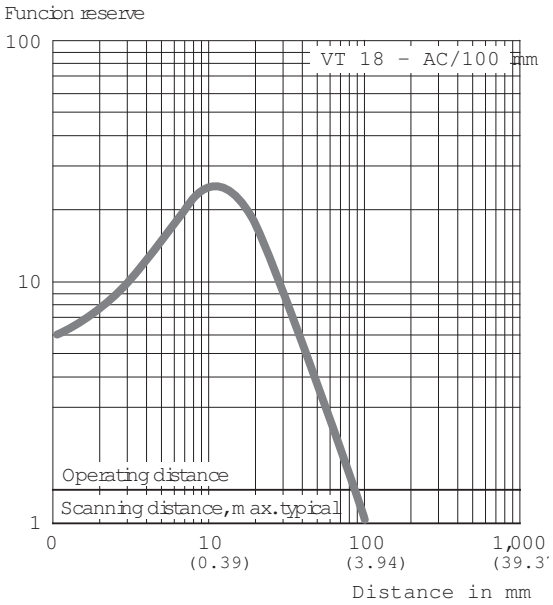

DIMENSIONAL DRAWING

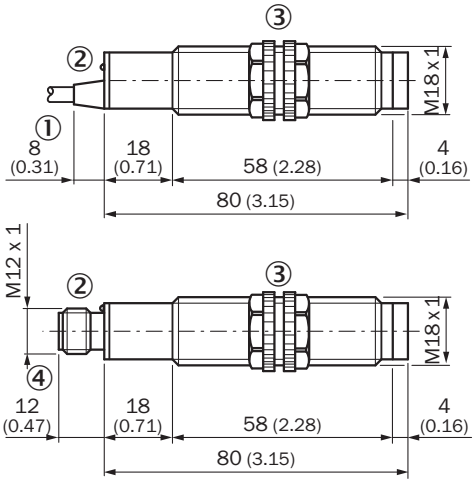

Dimensions in mm (inch)
① Connection cable
② LED signal strength indicator
③ Fastening nuts, 22 mm hex (included)
④ Connector M12, 4- pin

Further information as well as suitable accessories, example applications and downloads such as CAD dimensional models, operating instructions and software can be found at www.sick.com/6011370

SICK AG
WALDKIRCH
GERMANY
SICK.COM

SICK AT A GLANCE

SICK is a leading global technology company for intelligent sensors and integrated solutions in industrial automation. Our technologies set benchmarks, making your industrial processes more efficient, safer and more sustainable – both in logistics and manufacturing operations.

SICK combines sensor intelligence with industry expertise and certified consulting services. We provide the ideal foundation for scalable as well as tailor-made automation solutions and create added value along the entire value chain. Our close partnerships with our customers are more than just a promise: Together, we optimize productivity, improve quality, protect health and safety, and help build a sustainable future. All with empathy and trust.

Since 1946, we have been developing innovative technologies with passion and a pioneering spirit. With a global network in around 40 countries, SICK has a global presence and is always close by. The company's headquarters are located in Waldkirch near Freiburg, Germany. Our customers benefit from our understanding of both local and global requirements, which enables us to deliver tailor-made solutions

SICK
Sensor Intelligence