SICK.COM

DATA SHEET

VTE180-2N41182

V180
Photoelectric sensors

Sensor Intelligence

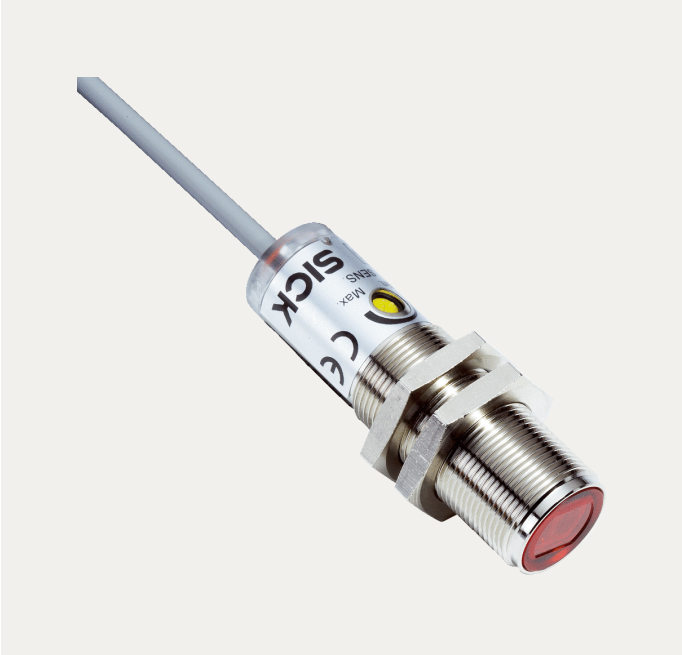

Illustration may differ

PHOTOELECTRIC SENSORS

VTE180-2N41182

ORDERING INFORMATION

Type	part no.
VTE180-2N41182	6041808

Further device versions and accessories at www.sick.com/V180

DETAILED TECHNICAL DATA

FEATURES

Functional principle	Photoelectric proximity sensor
Functional principle detail	Energetic
Dimensions (W x H x D)	18 mm x 18 mm x 62.5 mm
Housing design (light emission)	Cylindrical
Housing length	62.5 mm
Thread diameter (housing)	M18 x 1
Optical axis	Axial
Sensing range max.	1 mm ... 1,100 mm [1]
Sensing range	1 mm ... 800 mm [1]
Focus	Approx. 1.2°
Type of light	Visible red light
Light source	LED [2]
Light spot size (distance)	Ø 30 mm (800 mm)
Angle of dispersion	Approx. 1.2°
Wave length	645 nm
Adjustment	Potentiometer, 270° (Sensing range)

[1] Object with 90% remission (based on standard white, DIN 5033).

[2] Average service life: 100,000 h at T_u = +25 °C.

MECHANICS/ELECTRONICS

Supply voltage U_B	10 V DC ... 30 V DC [1]
Ripple	± 10 % [2]
Current consumption	30 mA [3]
Switching output	NPN [4]
Switching mode	Light/dark switching [4]
Switching mode selector	Selectable via L/D control cable
Signal voltage NPN HIGH/LOW	Approx. V_S / < 1.8 V
Output current $I_{max.}$	≤ 100 mA
Response time	≤ 0.5 ms [5]
Switching frequency	1,000 Hz [6]
Connection type	Cable, 4-wire, 2 m [7]
Cable material	Plastic, PVC
Conductor cross section	0.18 mm²
Cable diameter	Ø 3.8 mm
Circuit protection	A [8] B [9] D [10]
Protection class	III
Weight	95 g
Housing material	Metal, Nickel-plated brass and PC
Optics material	Plastic, PMMA
Enclosure rating	IP67
Items supplied	Fastening nuts (2 x)
Ambient operating temperature	–25 °C ... +55 °C
Ambient temperature, storage	–40 °C ... +70 °C

[1] Limit values when operated in short-circuit protected network: max. 8 A.

[2] May not fall below or exceed U_V tolerances.

[3] Without load.

[4] Control wire open: light switching L.ON.

[5] Signal transit time with resistive load.

[6] With light/dark ratio 1:1.

[7] Do not bend below 0 °C.

[8] A = V_S connections reverse-polarity protected.

[9] B = inputs and output reverse-polarity protected.

[10] D = outputs overcurrent and short-circuit protected.

SAFETY-RELATED PARAMETERS

$MTTF_D$	1,889 years
DC_{avg}	0 %

CERTIFICATES

EU declaration of conformity	✓
UK declaration of conformity	✓
ACMA declaration of conformity	✓

Moroccan declaration of conformity	✓
China RoHS	✓
China Compulsory Product Certification (CCC) exempt	✓
cRUus certificate	✓
Photobiological safety (DIN EN 62471) certificate	✓

ADJUSTMENTS

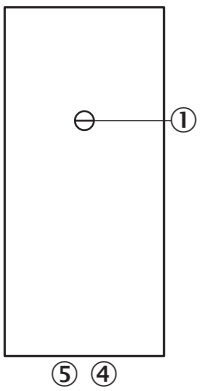

③ sensitivity control 270°
④ LED indicator orange: switching output active
⑤ LED indicator green

CONNECTION TYPE

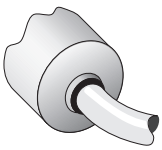

CONNECTION DIAGRAM CD-089

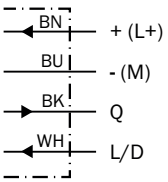

CHARACTERISTIC CURVE VTE180-2, 1.100 MM, AXIAL

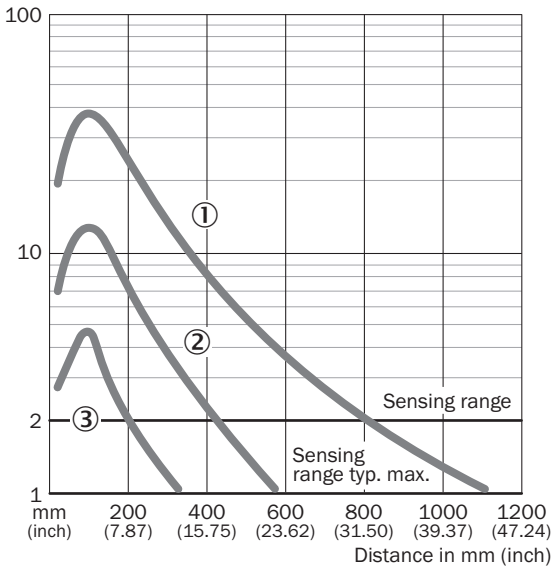

① Sensing range on white, 90% remission factor
② Sensing range on gray, 18% remission factor
③ Sensing range on black, 6% remission factor

LIGHT SPOT SIZE VTE180-2, 900 MM, 1.100 MM

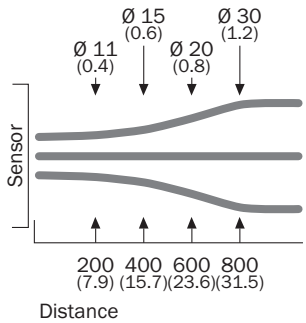

SENSING RANGE DIAGRAM VTE180-2, 1.100 MM, AXIAL

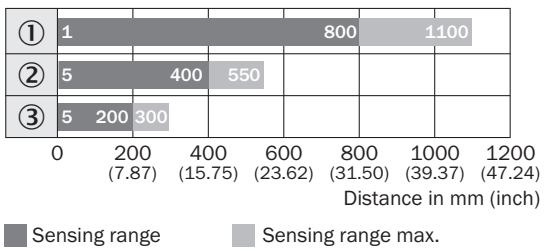

DIMENSIONAL DRAWING VTF180-2, VTE180-2, VTB180-2, METAL, AXIAL

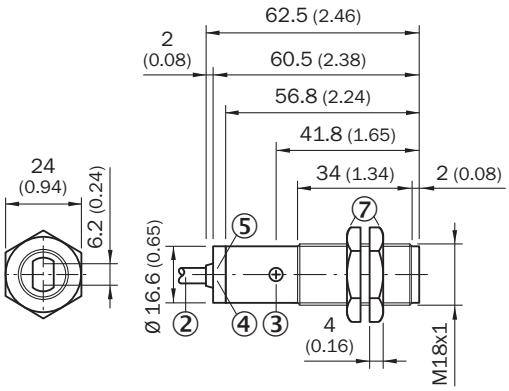

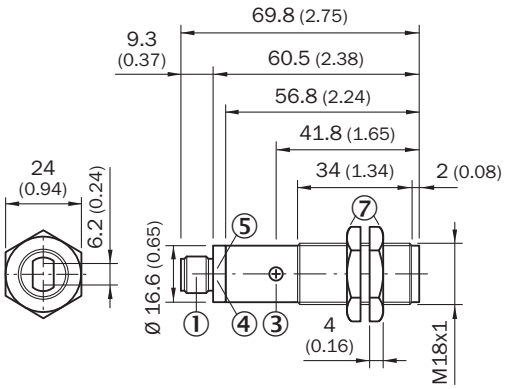

Dimensions in mm (inch)
① M12 male device connector, 4-pin
② Connection cable 2 m
③ sensitivity control 270°
④ LED indicator orange: switching output active
⑤ LED indicator green: strength indicator
⑦ Fastening nuts (2x); width across 24, metal

Further information as well as suitable accessories, example applications and downloads such as CAD dimensional models, operating instructions and software can be found at www.sick.com/6041808

SICK AG
WALDKIRCH
GERMANY
SICK.COM

SICK AT A GLANCE

SICK is a leading global technology company for intelligent sensors and integrated solutions in industrial automation. Our technologies set benchmarks, making your industrial processes more efficient, safer and more sustainable – both in logistics and manufacturing operations.

SICK combines sensor intelligence with industry expertise and certified consulting services. We provide the ideal foundation for scalable as well as tailor-made automation solutions and create added value along the entire value chain. Our close partnerships with our customers are more than just a promise: Together, we optimize productivity, improve quality, protect health and safety, and help build a sustainable future. All with empathy and trust.

Since 1946, we have been developing innovative technologies with passion and a pioneering spirit. With a global network in around 40 countries, SICK has a global presence and is always close by. The company's headquarters are located in Waldkirch near Freiburg, Germany. Our customers benefit from our understanding of both local and global requirements, which enables us to deliver tailor-made solutions

SICK
Sensor Intelligence