SICK.COM

DATA SHEET

WL9-2P131

Photoelectric sensors

SICK Sensor Intelligence

Illustration may differ

PHOTOELECTRIC SENSORS

WL9-2P131

ORDERING INFORMATION

Type	part no.
WL9-2P131	1018285

Further device versions and accessories at www.sick.com/

DETAILED TECHNICAL DATA

FEATURES

Functional principle	Photoelectric retro-reflective sensor
Dimensions (W x H x D)	12 mm x 40 mm x 22 mm
Housing design (light emission)	Rectangular
Sensing range max.	0 m ... 4 m [1]
Sensing range	0 m ... 3 m [1]
Type of light	Visible red light
Light source	LED
Adjustment	Single teach-in button (Sensitivity)

[1] Reflector PL80A.

MECHANICS/ELECTRONICS

Supply voltage	10 V DC ... 30 V DC
Ripple	< 5 V_{pp}
Current consumption	30 mA [1]
Switching output	PNP
Switching mode	Light/dark switching
Response time	≤ 625 µs [2]
Connection type	Cable, 2 m [3]
Conductor cross section	0.14 mm²
Housing material	Plastic, ABS
Optics material	Plastic, PMMA

[1] Without load.

[2] Signal transit time with resistive load.

[3] Do not bend below 0 °C.

Enclosure rating	IP69K
Ambient operating temperature	–40 °C ... +60 °C
Ambient temperature, storage	–40 °C ... +75 °C
UL File No.	NRKH.E181493 & NRKH7.E181493

[1] Without load.

[2] Signal transit time with resistive load.

[3] Do not bend below 0 °C.

CONNECTION TYPE

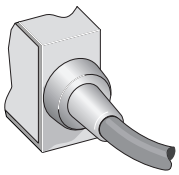

CONNECTION DIAGRAM

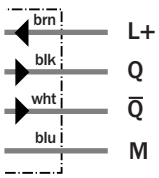

CHARACTERISTIC CURVE

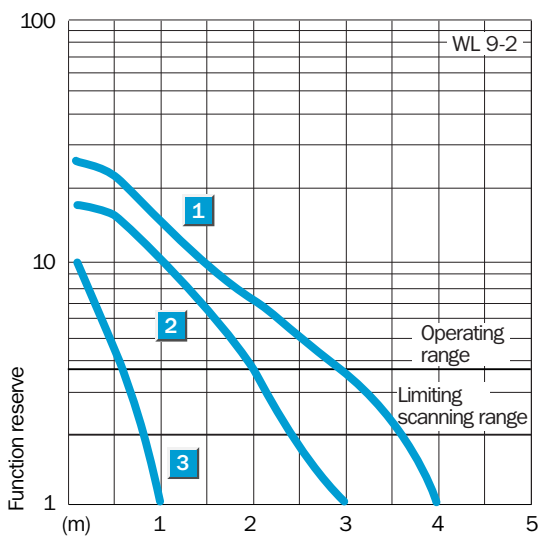

ADJUSTMENTS

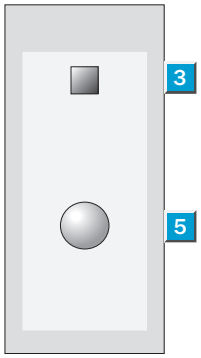

④ Signal strength indicator, LED, yellow
⑥ Teach-in button

DIMENSIONAL DRAWING

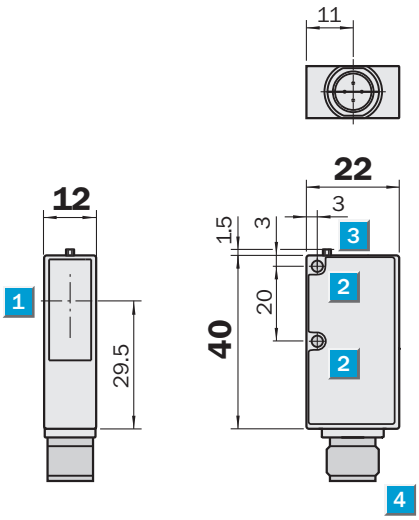

Dimensions in mm (inch)
① Center of optical axis
② mounting hole Ø 3.2 mm
③ LED signal strength indicator
④ Connector M12 or M8, 4-pin, 2 m connection cable or 120 mm cable with connector M12, 4-pin
⑤ Teach-in button

Further information as well as suitable accessories, example applications and downloads such as CAD dimensional models, operating instructions and software can be found at www.sick.com/1018285

SICK AG
WALDKIRCH
GERMANY
SICK.COM

SICK AT A GLANCE

SICK is a leading global technology company for intelligent sensors and integrated solutions in industrial automation. Our technologies set benchmarks, making your industrial processes more efficient, safer and more sustainable – both in logistics and manufacturing operations.

SICK combines sensor intelligence with industry expertise and certified consulting services. We provide the ideal foundation for scalable as well as tailor-made automation solutions and create added value along the entire value chain. Our close partnerships with our customers are more than just a promise: Together, we optimize productivity, improve quality, protect health and safety, and help build a sustainable future. All with empathy and trust.

Since 1946, we have been developing innovative technologies with passion and a pioneering spirit. With a global network in around 40 countries, SICK has a global presence and is always close by. The company's headquarters are located in Waldkirch near Freiburg, Germany. Our customers benefit from our understanding of both local and global requirements, which enables us to deliver tailor-made solutions

SICK
Sensor Intelligence