SICK.COM

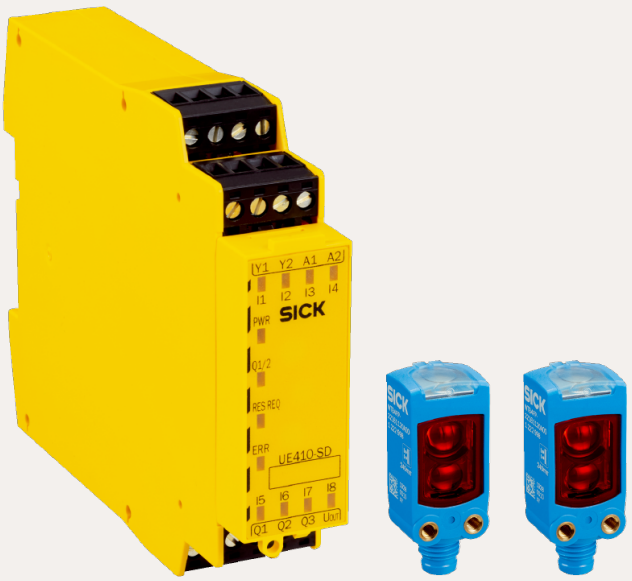

DATA SHEET

SYS/SGD-W4150010002BX3

Safeguard Detector
Safety systems for automating material flows

SICK Sensor Intelligence

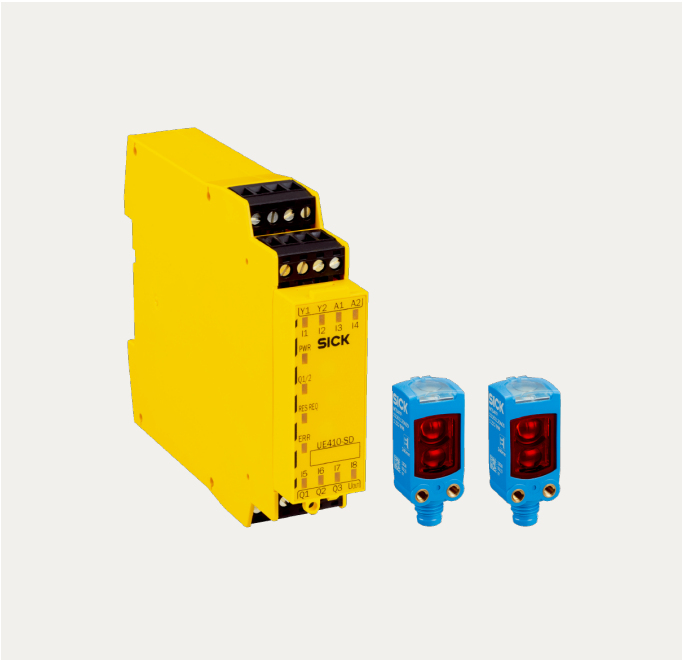

SAFETY SYSTEMS FOR AUTOMATING MATERIAL FLOWS

SYS/SGD-W4150010002BX3

ORDERING INFORMATION

Type	part no.
SYS/SGD-W4150010002BX3	1129656

Further device versions and accessories at www.sick.com/Safeguard_Detector

DETAILED TECHNICAL DATA

FEATURES

Safety task	Natural protection due to the material
Product scope	System
Safeguard Detector variant	Box variant
Detection zone	30 mm ... 150 mm [1]
Safety-related parameters	
Category	Category 3 (EN ISO 13849-1)
Performance level	PL d (EN ISO 13849-1)
Performance class SRS/SRSS	D (IEC TS 62998-1)
PFH_D (mean probability of a dangerous failure per hour)	$1.0 * 10^{-7}$
DC_{avg} (diagnostic coverage)	80 % (EN ISO 13849-1)
$MTTF_D$ (mean time to dangerous failure)	250 years (EN ISO 13849-1)
Items supplied	1 × UE410-SD safety controller 2 × WTB4F MultiPulse sensor 150 mm Software, operating instructions, connection diagram and SISTEMA file

[1] If no movable physical guard is identified in the detection zone, the safety controller prompts the machine to enter the safe state.

UE410-SD SAFETY CONTROLLER

Note	The UE410-SD safety evaluation module can be operated with one or two MultiPulse sensor pairs. The actuator can be connected directly to the UE410-SD safety evaluation module. The safety chain can also be expanded with additional logic elements (e.g., a higher-level safety controller).
Configuration method	Hard wired
Number of connectable sensor pairs	1 or 2
Connection type	Screw-type terminals
Pulse rate of the sensors	10 Hz
Supply voltage V_S	24 V DC (19.2 V ... 30 V)
Protection class	III (EN 50178)
Enclosure rating	IP20 (EN 60529)
Ambient operating temperature	–25 °C ... 55 °C

Response time of the overall safety system (sensors and safety evaluation module)	≤ 160 ms

MULTIPULSE PHOTOELECTRIC PROXIMITY SENSOR

Number of sensors	2 pieces
Detection zone	30 mm ... 150 mm [1]
Remission	6 % ... 90 %
Pulse frequency	10 Hz
Response time	≤ 100 ms
Type of light	Visible red light
Wave length	650 nm
Light spot size (distance)	Ø 7 mm (50 mm)
Connection type	Connector M8, 3-pin
Voltage supply	Via safety controller
Enclosure rating	IP67 (EN 60529)
Ambient operating temperature	–40 °C ... +60 °C

[1] If no movable physical guard is identified in the detection zone, the safety controller prompts the machine to enter the safe state.

CERTIFICATES

EU declaration of conformity	✓
UK declaration of conformity	✓
China RoHS	✓
UK-Type-Examination approval	✓
TÜV approval	✓
TÜV approval annex	✓
EC-Type-Examination approval (Machinery Directive)	✓
EC-Type-Examination approval (Machinery Regulation)	✓

DIMENSIONAL DRAWING

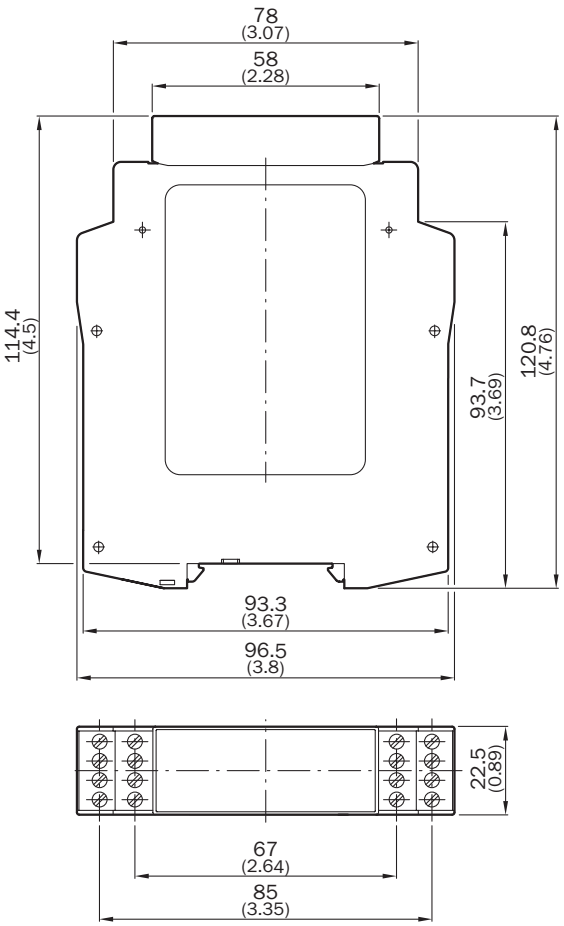

Dimensions in mm (inch)

DIMENSIONAL DRAWING

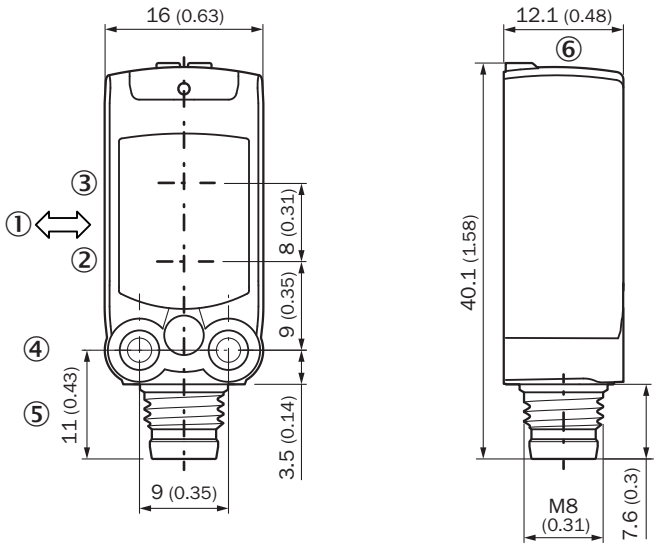

Dimensions in mm (inch)
① Standard direction of the material being detected
② Center of optical axis, sender
③ Center of optical axis, receiver
④ M3 mounting hole
⑤ Connection
⑥ display and adjustment elements

Further information as well as suitable accessories, example applications and downloads such as CAD dimensional models, operating instructions and software can be found at www.sick.com/1129656

SICK AG
WALDKIRCH
GERMANY
SICK.COM

SICK AT A GLANCE

SICK is a leading global technology company for intelligent sensors and integrated solutions in industrial automation. Our technologies set benchmarks, making your industrial processes more efficient, safer and more sustainable – both in logistics and manufacturing operations.

SICK combines sensor intelligence with industry expertise and certified consulting services. We provide the ideal foundation for scalable as well as tailor-made automation solutions and create added value along the entire value chain. Our close partnerships with our customers are more than just a promise: Together, we optimize productivity, improve quality, protect health and safety, and help build a sustainable future. All with empathy and trust.

Since 1946, we have been developing innovative technologies with passion and a pioneering spirit. With a global network in around 40 countries, SICK has a global presence and is always close by. The company's headquarters are located in Waldkirch near Freiburg, Germany. Our customers benefit from our understanding of both local and global requirements, which enables us to deliver tailor-made solutions

SICK

Sensor Intelligence