SICK.COM



DATA SHEET

# C4C-SA12030A10000, C4C-EA12030A10000

deTec
Safety light curtains

SICK Sensor Intelligence



Illustration may differ

## SAFETY LIGHT CURTAINS

# C4C-SA12030A10000, C4C-EA12030A10000

### ORDERING INFORMATION

| System part | Type | part no. |
|---|---|---|
| | C4C-SA12030A10000 | 1211501 |
| | C4C-EA12030A10000 | 1211502 |

Further device versions and accessories at www.sick.com/deTec

## DETAILED TECHNICAL DATA

### FEATURES

| | |
|---|---|
| Product version | deTec4 Core |
| Application | Normal industrial environment |
| System part | Pair |
| Resolution | 30 mm |
| Scanning range | 15 m |
| Protective field height | 1,200 mm |
| Response time | 12 ms |
| No blind zones | Yes |
| Synchronization | Optical synchronization |
| Items supplied | Sender<br>Receiver<br>Test rod with diameter corresponding to the resolution of the safety light curtain<br>Safety instruction<br>Mounting instructions<br>Operating instructions for download |

### SAFETY-RELATED PARAMETERS

| | |
|---|---|
| Type | Type 4 (IEC 61496-1) |
| Safety integrity level | SIL 3 (IEC 61508) |
| Category | Category 4 (ISO 13849-1) |
| Performance level | PL e (ISO 13849-1) |
| $PFH_D$ (mean probability of a dangerous failure per hour) | $3.7 \times 10^{-9}$ |
| $T_M$ (mission time) | 20 years (ISO 13849-1) |
| Safe state in the event of a fault | At least one OSSD is in the OFF state. |

## INTERFACES

| | |
|---|---|
| System connection | Plug, M12, 5-pin |
| Length of cable | 150 mm |
| Cable diameter | 4.3 mm |
| Cable bend radius | |
| Stationary position | > 12 x cable diameter |
| Flexible use | > 15 x cable diameter |
| Display elements | LEDs |

## ELECTRONICS

| | |
|---|---|
| Protection class | III (IEC 61140) |
| Supply voltage $V_S$ | 24 V DC (19.2 V ... 28.8 V) |
| Ripple | ≤ 10 % |
| Output signal switching devices (OSSDs) | |
| Type of output | 2 PNP semiconductors, short-circuit protected, cross-circuit monitored [1] |
| ON state, switching voltage HIGH | 24 V DC ($V_S$ – 2.25 V DC ... $V_S$) |
| OFF state, switching voltage LOW | ≤ 2 V DC |
| Current-carrying capacity per OSSD | ≤ 300 mA |

[1] Applies to the voltage range between –30 V and +30 V.

## MECHANICS

| | |
|---|---|
| Dimensions | See dimensional drawing |
| Housing material | Aluminum extruded profile |

## AMBIENT DATA

| | |
|---|---|
| Enclosure rating | IP65 (IEC 60529)<br>IP67 (IEC 60529) |
| Ambient operating temperature | –30 °C ... +55 °C |
| Storage temperature | –30 °C ... +70 °C |
| Air humidity | 15 % ... 95 %, Non-condensing |
| Vibration resistance | 5 ... 150 Hz, 3,5 mm / 1 g (EN 60068-2-6) |
| Shock resistance | 15 g / 6 ms (EN 60068-2-27) |
| Class | 3M4 (IEC TR 60721-4-3) |

## OTHER INFORMATION

| | |
|---|---|
| Wave length | 850 nm |
| Type of light | Near-infrared (NIR), invisible |

**DIMENSIONAL DRAWING**

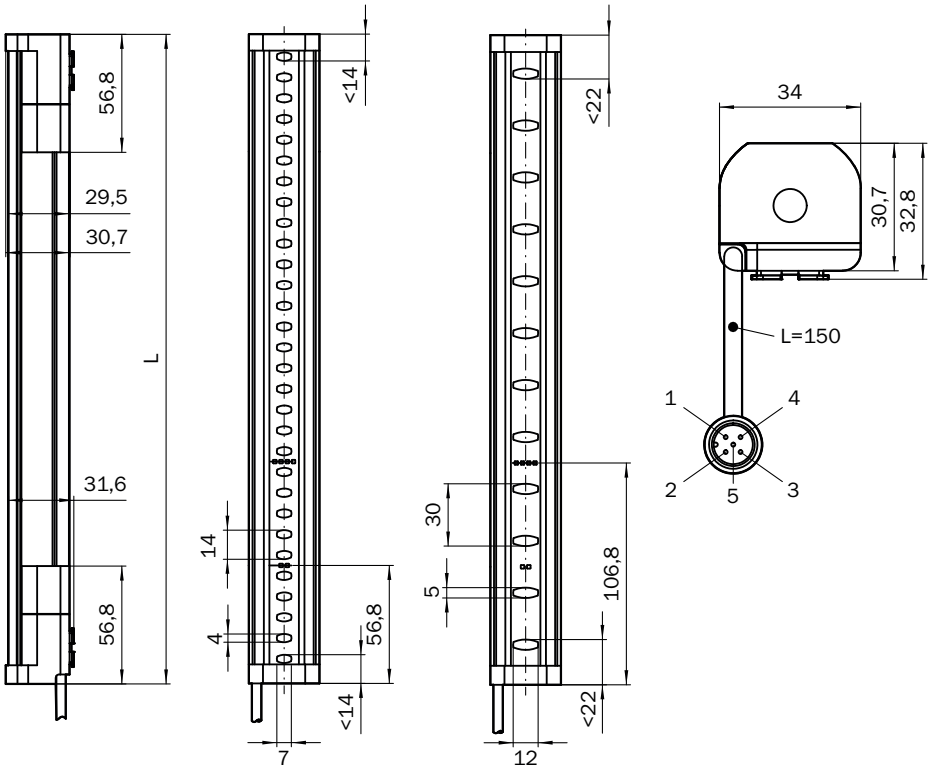


Dimensions in mm (inch)

| Protective field height | L |
|---|---|
| 300 (11.81) | 313 (12.32) |
| 450 (17.72) | 463 (18.23) |
| 600 (23.62) | 613 (24.13) |
| 750 (29.53) | 763 (30.04) |
| 900 (35.43) | 913 (35.94) |
| 1,050 (41.34) | 1,063 (41.85) |
| 1,200 (47.24) | 1,213 (47.76) |
| 1,350 (53.15) | 1,362 (53.62) |
| 1,500 (59.06) | 1,512 (59.53) |
| 1,650 (64.96) | 1,662 (65.43) |
| 1,800 (70.87) | 1,812 (71.34) |
| 1,950 (76.77) | 1,962 (77.24) |
| 2,100 (82.68) | 2,112 (83.15) |

**DETEC4 CORE SAFETY LIGHT CURTAIN TO RLY3-OSSD2 SAFETY RELAY**

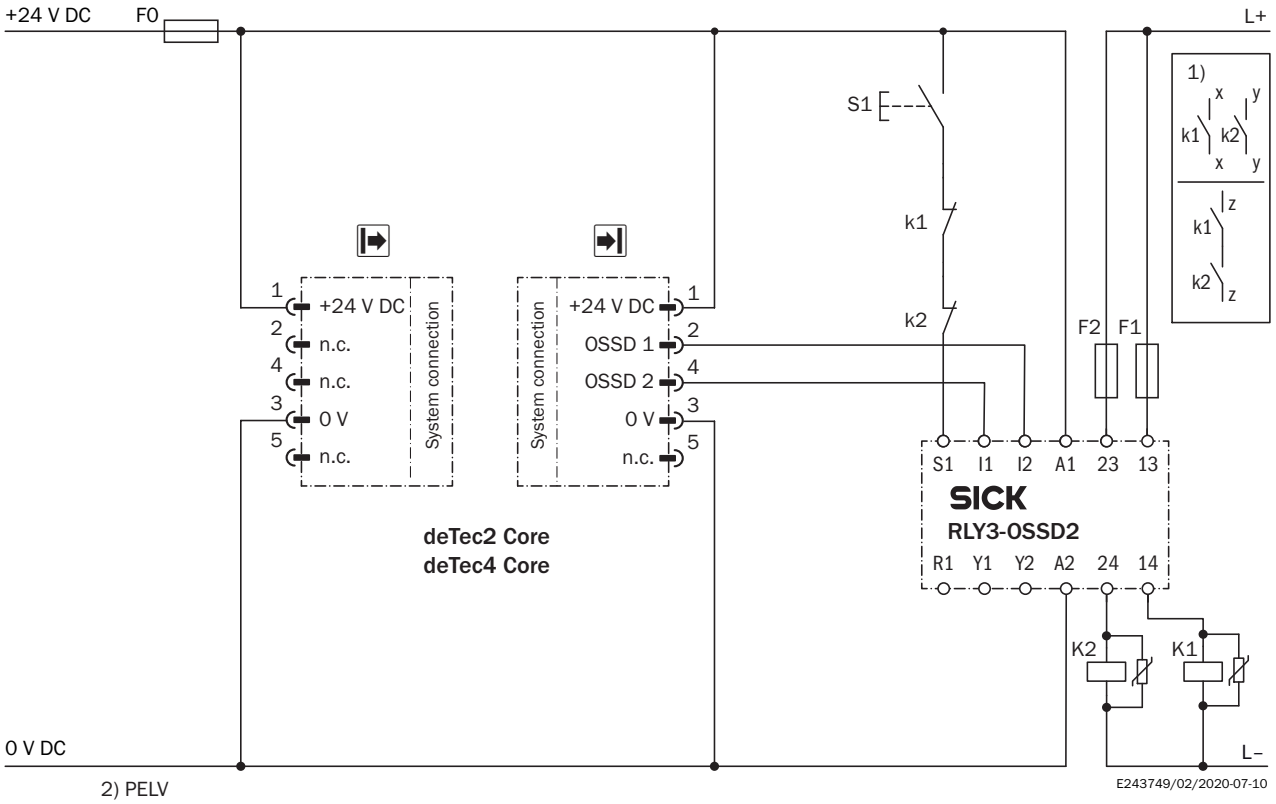


**Task**

Connection of a deTec4 Core safety light curtain to RLY3-OSSD2.
Operating mode: with restart interlock and external device monitoring.

**Function**

When the protective field is clear, the OSSD1 and OSSD2 outputs carry voltage. The system can be switched on when K1 and K2 are in a fault-free de-energized position. The RLY3-OSSD2 is switched on by pressing S1 (pushbutton is pressed and released). The outputs (contacts 13-14 and 23-24) switch the K1 and K2 contactors on. When the protective field is interrupted, the OSSD1 and OSSD2 outputs switch the RLY3-OSSD2 off. Contactors K1 and K2 are switched off.

**Fault analysis**

Cross-circuits and short-circuits of the OSSDs are recognized and lead to the locking status (lock-out). A malfunction with one of the K1 or K2 contactors is detected. The switch-off function is retained. In the event of manipulation (e.g., jamming) of the S1 pushbutton, the RLY3-OSSD2 will not re-enable the output current circuits.

**Comments**

[1] Output circuits: These contacts are to be connected to the controller such that, with the output circuit open, the dangerous state is disabled. For categories 4 and 3, the integration must be dual-channel (x/y paths). Single-channel integration in the control (z path) is only possible with a single-channel control and by taking the risk analysis into account.
These contacts must be incorporated into the control such that the dangerous state is brought to an end if the output circuit is open. For categories 4 and 3, they must be incorporated on dual-channels (x, y paths). Single-channel incorporation into the control (z path) is only possible with a singlechannel control and taking the risk analysis into account.
[2] SELV/PELV safety extra-low voltage.

Further information as well as suitable accessories, example applications and downloads such as CAD dimensional models, operating instructions and software can be found at www.sick.com/1211501

SICK AG
WALDKIRCH
GERMANY
SICK.COM

# SICK AT A GLANCE

SICK is a leading global technology company for intelligent sensors and integrated solutions in industrial automation. Our technologies set benchmarks, making your industrial processes more efficient, safer and more sustainable – both in logistics and manufacturing operations.

SICK combines sensor intelligence with industry expertise and certified consulting services. We provide the ideal foundation for scalable as well as tailor-made automation solutions and create added value along the entire value chain. Our close partnerships with our customers are more than just a promise: Together, we optimize productivity, improve quality, protect health and safety, and help build a sustainable future. All with empathy and trust.

Since 1946, we have been developing innovative technologies with passion and a pioneering spirit. With a global network in around 40 countries, SICK has a global presence and is always close by. The company's headquarters are located in Waldkirch near Freiburg, Germany. Our customers benefit from our understanding of both local and global requirements, which enables us to deliver tailor-made solutions

SICK

Sensor Intelligence