SICK.COM

DATA SHEET

SPZ-008-AD-A

Collets
Shaft adaptation

SICK Sensor Intelligence

SHAFT ADAPTATION

SPZ-008-AD-A

ORDERING INFORMATION

Type	part no.
SPZ-008-AD-A	2029176

Further device versions and accessories at www.sick.com/Collets

DETAILED TECHNICAL DATA

FEATURES

Product segment	Shaft adaptation
Product	Collets
Description	Collet for blind hollow shaft, shaft diameter 8 mm, outer diameter 15 mm
Diameter	15 mm

DIMENSIONAL DRAWING

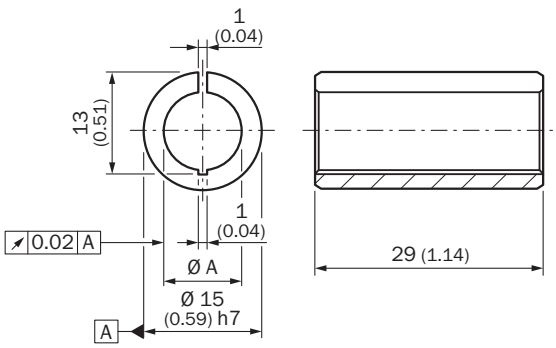

Dimensions in mm (inch)

Further information as well as suitable accessories, example applications and downloads such as CAD dimensional models, operating instructions and software can be found at www.sick.com/2029176

SICK AG
WALDKIRCH
GERMANY
SICK.COM

SICK AT A GLANCE

SICK is a leading global technology company for intelligent sensors and integrated solutions in industrial automation. Our technologies set benchmarks, making your industrial processes more efficient, safer and more sustainable – both in logistics and manufacturing operations.

SICK combines sensor intelligence with industry expertise and certified consulting services. We provide the ideal foundation for scalable as well as tailor-made automation solutions and create added value along the entire value chain. Our close partnerships with our customers are more than just a promise: Together, we optimize productivity, improve quality, protect health and safety, and help build a sustainable future. All with empathy and trust.

Since 1946, we have been developing innovative technologies with passion and a pioneering spirit. With a global network in around 40 countries, SICK has a global presence and is always close by. The company's headquarters are located in Waldkirch near Freiburg, Germany. Our customers benefit from our understanding of both local and global requirements, which enables us to deliver tailor-made solutions

SICK
Sensor Intelligence