SICK.COM

DATA SHEET

# WL280-2R1531

W280
Photoelectric sensors

SICK Sensor Intelligence

Illustration may differ

## PHOTOELECTRIC SENSORS

# WL280-2R1531

### ORDERING INFORMATION

| Type | part no. |
|---|---|
| WL280-2R1531 | 6044761 |

Further device versions and accessories at www.sick.com/W280

## DETAILED TECHNICAL DATA

### FEATURES

| | |
|---|---|
| Functional principle | Photoelectric retro-reflective sensor |
| Functional principle detail | With minimum distance to reflector (dual lens system) |
| Dimensions (W x H x D) | 23.5 mm x 74.5 mm x 63 mm |
| Housing design (light emission) | Rectangular |
| Sensing range max. | 0.01 m ... 15 m [1]<br>0.01 m ... 12 m [2] |
| Sensing range | 0.01 m ... 13 m [1]<br>0.01 m ... 11 m [2] |
| Type of light | Visible red light |
| Light source | LED [3] |
| Light spot size (distance) | Ø 260 mm (8 m) |
| Adjustment | Potentiometer |

[1] Reflector PL80A.

[2] Reflector P250.

[3] Average service life: 100,000 h at $T_u$ = +25 °C.

## MECHANICS/ELECTRONICS

| | |
|---|---|
| Supply voltage $U_B$ | 24 V DC ... 240 V DC [1]<br>24 V AC ... 240 V AC [1] |
| Power consumption | ≤ 5 VA |
| Switching output | Relay, electrically isolated [2] |
| Output function | Change-over contacts |
| Switching mode | Light switching [2] |
| Switching current (switching voltage) | 3 A (240 V AC)<br>3 A (30 V DC) |
| Response time | ≤ 15 ms |
| Switching frequency | 33 Hz [3] |
| Connection type | Cable, 5-wire, 2 m [4] |
| Cable material | Plastic, PVC |
| Conductor cross section | 0.76 mm² |
| Circuit protection | A [5]<br>C [6] |
| Protection class | II [7] |
| Overvoltage category | 3 |
| Weight | 150 g |
| Polarizing filter | ✓ |
| Interference emission | EN 61000-6-3 (only –2Hxxxx) [8] |
| Housing material | Plastic, ABS |
| Optics material | Plastic, PMMA |
| Enclosure rating | IP66<br>IP67 |
| Items supplied | Mounting bracket BEF-W280, Reflector P250 |
| Usage category | AC-15, DC-13<br>According to EN 60947-1 |
| Electromagnetic compatibility (EMC) | EN 60947-5-2<br>EN 61000-6-3 (only –2Hxxxx) [9] [9] |
| Ambient operating temperature | –25 °C ... +55 °C |
| Ambient temperature, storage | –40 °C ... +70 °C |
| UL File No. | NRKH2.E300503 & NRKH8.E300503 |

[1] +- 10%.

[2] Provide suitable spark suppression for inductive or capacitive loads.

[3] With light/dark ratio 1:1.

[4] Do not bend below 0 °C.

[5] A = $V_s$ connections reverse-polarity protected.

[6] C = interference suppression.

[7] Rated voltage: 250 V AC/DC.

[8] In the case of a DC supply (relating to EN 61000-6-3) the length of cable between the supply source and the sensor must be < 30 m.

[9] The AC/DC devices (-2Rxxxx only) comply with the Radio Safety Requirements for the industrial sector (Radio Safety Class A). They may cause radio interference if used in a residential area.

## SAFETY-RELATED PARAMETERS

| | |
|---|---|
| $MTTF_D$ | 1,558 years |
| $DC_{avg}$ | 0 % |

## CERTIFICATES

| | |
|---|---|
| EU declaration of conformity | ✓ |
| UK declaration of conformity | ✓ |
| ACMA declaration of conformity | ✓ |
| Moroccan declaration of conformity | ✓ |
| China RoHS | ✓ |
| CCC certificate | ✓ |
| cRUus certificate | ✓ |
| Photobiological safety (DIN EN 62471) certificate | ✓ |

## ADJUSTMENTS WL280-2H/-2R

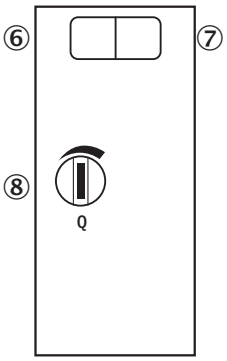


⑥ LED indicator green: Stability indicator
⑦ LED indicator yellow: Status of received light beam
⑧ Sensitivity control: potentiometer

## CONNECTION DIAGRAM CD-163

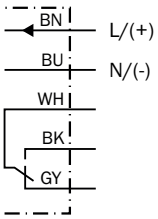

**CHARACTERISTIC CURVE**

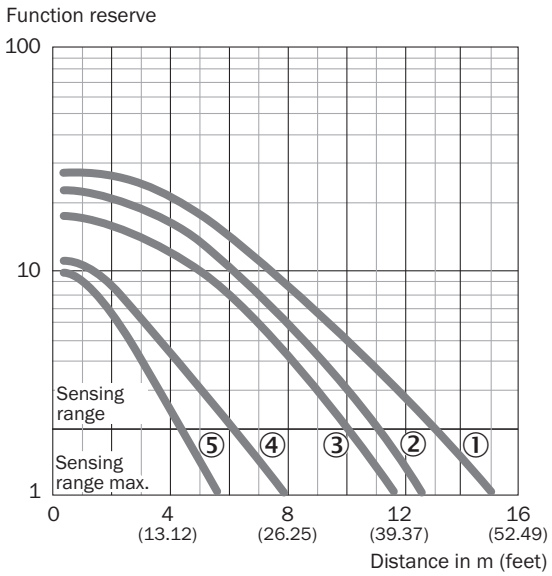


① Reflector PL80A, C110A
② Reflector P250
③ Reflector PL50A, PL40A, PL30A, PL31A
④ Reflector PL20A
⑤ Diamond Grade reflective tape, 100 mm x 100 mm

**SENSING RANGE DIAGRAM**

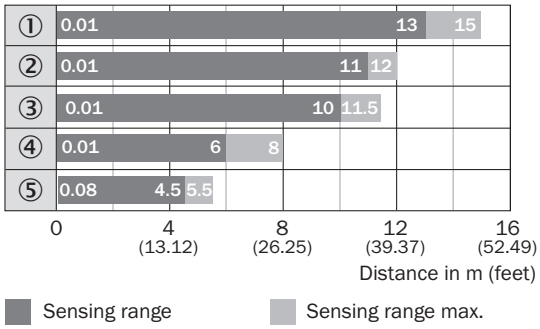


① Reflector PL80A, C110A
② Reflector P250
③ Reflector PL50A, PL40A, PL30A, PL31A
④ Reflector PL20A
⑤ Diamond Grade reflective tape, 100 mm x 100 mm

**DIMENSIONAL DRAWING WTE280-2, WL280-2, AC/DC**

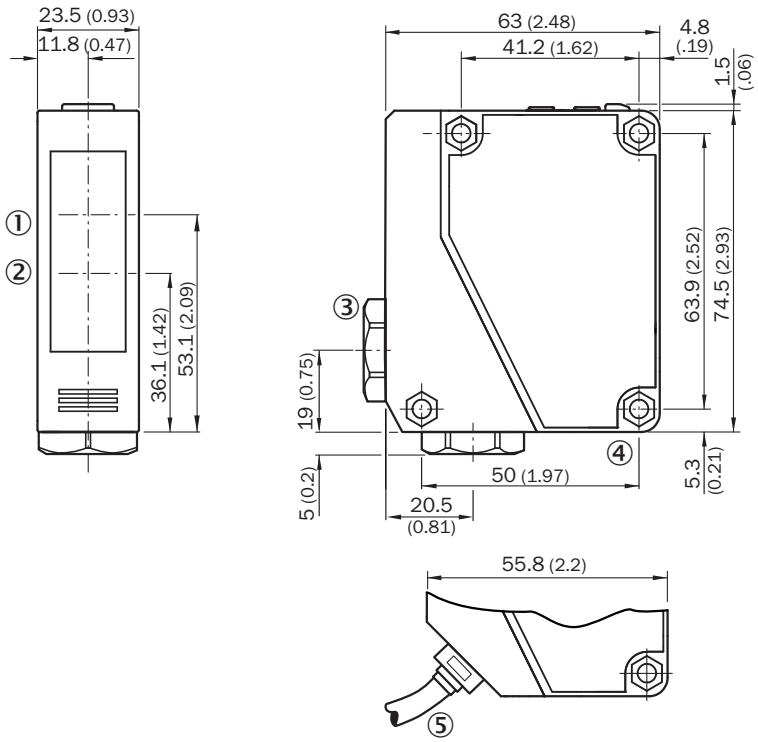


Dimensions in mm (inch)
① Center of optical axis, receiver
② Center of optical axis, sender
③ Cable entry gland 3/8" for cable diameter 6 to 8 mm
④ Mounting hole, Ø 4.3 mm
⑤ Cable, 2 m, 5-wire, Ø 6.3 mm

Further information as well as suitable accessories, example applications and downloads such as CAD dimensional models, operating instructions and software can be found at www.sick.com/6044761

SICK AG
WALDKIRCH
GERMANY
SICK.COM

# SICK AT A GLANCE

SICK is a leading global technology company for intelligent sensors and integrated solutions in industrial automation. Our technologies set benchmarks, making your industrial processes more efficient, safer and more sustainable – both in logistics and manufacturing operations.

SICK combines sensor intelligence with industry expertise and certified consulting services. We provide the ideal foundation for scalable as well as tailor-made automation solutions and create added value along the entire value chain. Our close partnerships with our customers are more than just a promise: Together, we optimize productivity, improve quality, protect health and safety, and help build a sustainable future. All with empathy and trust.

Since 1946, we have been developing innovative technologies with passion and a pioneering spirit. With a global network in around 40 countries, SICK has a global presence and is always close by. The company's headquarters are located in Waldkirch near Freiburg, Germany. Our customers benefit from our understanding of both local and global requirements, which enables us to deliver tailor-made solutions

SICK
Sensor Intelligence