SICK.COM

DATA SHEET

TBS-1NES41006CM

TBS
Temperature sensors

Sensor Intelligence

Illustration may differ

TEMPERATURE SENSORS

TBS-1NES41006CM

ORDERING INFORMATION

Type	part no.
TBS-1NES41006CM	6064019

Further device versions and accessories at www.sick.com/TBS

DETAILED TECHNICAL DATA

FEATURES

Measuring range	–20 °C ... +120 °C
Sensor element	Pt1000, 2-wire
Output signal	IO-Link/PNP + 4 mA ... 20 mA
Maximum ohmic load R_A	≤ 100 kΩ Switching outputs < 0.5 kΩ output signal 4 mA ... 20 mA
Switching output	PNP
Number of switching outputs	2
Switching voltage	Supply voltage [V DC] - 1 V DC
Maximum switching current	≤ 250 mA
Switching delay	0 s ... 50 s, programmable
Setting accuracy of switching outputs	+0.1 °C
Display	14-segment LED, blue, 4-digits, height 9 mm, Display electronically turnable by 180 °, update: 200 ms
Rotatable housing	Display against housing with electrical connection: 330 °, housing against process connection: 320 °
Scaling of measuring range	Zero point: max. +25 % of span Full scale: max. –25 % of span

MECHANICS/ELECTRONICS

Communication interface	IO-Link
Communication Interface detail	IO-Link V1.1
Process connection	Compression fitting G ¼ A
Seal	Copper
Insertion length/diameter of probe	100 mm / 6 mm

[1] At room temperature and when connected through thread.

[2] For configurations with 2 switching outputs or with one switching output + one analog output.

[3] The enclosure rating classes specified only apply while the thermometer is connected with female connectors that provide the corresponding enclosure rating.

[4] IP enclosure rating as per IEC 60529.

Wetted parts	Stainless steel 1.4571 (AISI 316Ti)
Maximum process pressure	≤ 150 bar [1]
Housing material	Stainless steel 1.4301 (AISI 304) Lower body PC + ABS Plastic head TPE-E Input keypad PC Display window
Connection type	M12 round connector x 1, 4-pin [2] [3]
Enclosure rating	IP65 [4] IP67 [4]
Supply voltage	15 V DC ... 35 V DC
Maximum current consumption	≤ 45 mA
Total current consumption	570 mA (incl. switching current) 320 mA
Electrical safety	Protection class: III, dielectric strength: 500 V, Overvoltage protection: 40 V DC, Short-circuit protection: Q_A, Q_1, Q_2 towards M, Reverse polarity protection: L^+ to M
CE-conformity	2004/108/EC, EN 61326-1 emission (group 1, class B) and interference immunity (industrial application)
MTTF	283 years

[1] At room temperature and when connected through thread.

[2] For configurations with 2 switching outputs or with one switching output + one analog output.

[3] The enclosure rating classes specified only apply while the thermometer is connected with female connectors that provide the corresponding enclosure rating.

[4] IP enclosure rating as per IEC 60529.

PERFORMANCE

Accuracy of sensor element	Class A according to IEC 60751 [1] [2]
Accuracy of switching output	≤ ± 0.8 % of span
Display accuracy	≤ ± 0.8 % of span ± 1 digit
Accuracy of analog output	≤ ± 0.5 % of span
Response time	t_{50} ≤ 5 s [3] t_{90} ≤ 10 s [3]

[1] ≤ ± (0.15 °C + 0.002 |t|).

[2] |t| is the absolute value of the temperature in °C.

[3] Depending on sensor configuration, according to IEC 60751.

AMBIENT DATA

Ambient temperature	–20 °C ... +80 °C
Storage and transport temperature	–20 °C ... +80 °C
Relative humidity	45 % ... 75 %

CERTIFICATES

EU declaration of conformity	✓
UK declaration of conformity	✓
China RoHS	✓
cULus certificate	✓
IO-Link certificate	✓

DIMENSIONAL DRAWING COMPRESSION FITTING G ¼ A

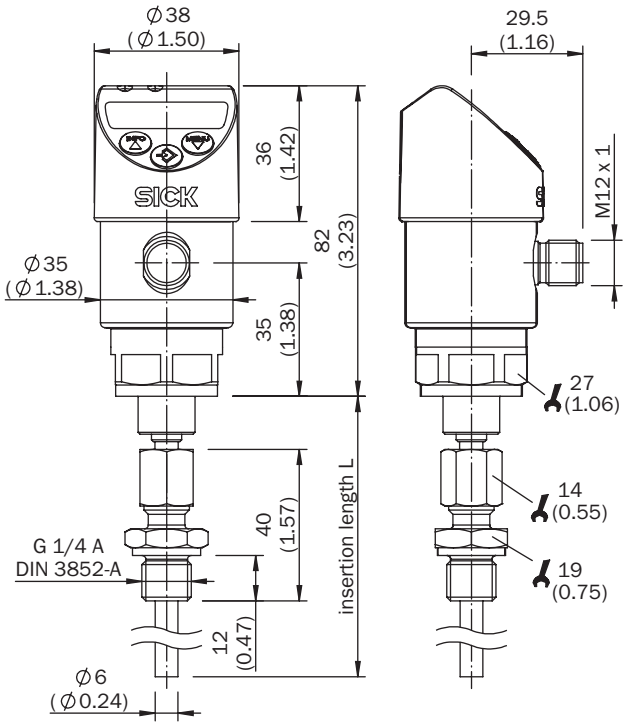

Dimensions in mm (inch)

CONNECTION TYPE

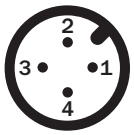

① L+
② Q_A/Q_2, type-dependent
③ M
④ Q_1

Further information as well as suitable accessories, example applications and downloads such as CAD dimensional models, operating instructions and software can be found at www.sick.com/6064019

SICK AG
WALDKIRCH
GERMANY
SICK.COM

SICK AT A GLANCE

SICK is a leading global technology company for intelligent sensors and integrated solutions in industrial automation. Our technologies set benchmarks, making your industrial processes more efficient, safer and more sustainable – both in logistics and manufacturing operations.

SICK combines sensor intelligence with industry expertise and certified consulting services. We provide the ideal foundation for scalable as well as tailor-made automation solutions and create added value along the entire value chain. Our close partnerships with our customers are more than just a promise: Together, we optimize productivity, improve quality, protect health and safety, and help build a sustainable future. All with empathy and trust.

Since 1946, we have been developing innovative technologies with passion and a pioneering spirit. With a global network in around 40 countries, SICK has a global presence and is always close by. The company's headquarters are located in Waldkirch near Freiburg, Germany. Our customers benefit from our understanding of both local and global requirements, which enables us to deliver tailor-made solutions

SICK
Sensor Intelligence