SICK.COM

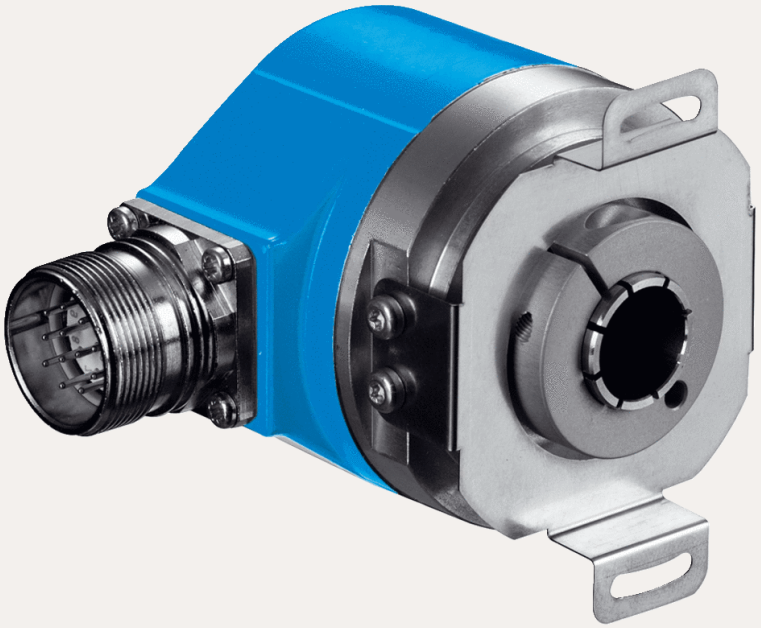

DATA SHEET

ARS60-HDA05000

ARS60
Absolute encoders

SICK Sensor Intelligence



Illustration may differ

ABSOLUTE ENCODERS

ARS60-HDA05000

ORDERING INFORMATION

Type	part no.
ARS60-HDA05000	1222624

Further device versions and accessories at www.sick.com/ARS60

DETAILED TECHNICAL DATA

SAFETY-RELATED PARAMETERS

$MTTF_D$ (mean time to dangerous failure)	300 years (EN ISO 13849-1) [1]

[1] This product is a standard product and does not constitute a safety component as defined in the Machinery Directive. Calculation based on nominal load of components, average ambient temperature 40°C, frequency of use 8760 h/a. All electronic failures are considered hazardous. For more information, see document no. 8015532.

PERFORMANCE

Number of steps per revolution (max. resolution)	5,000
Measuring step	360° /number of steps
Measuring step deviation	0.016° non-binary number of steps
Error limits G	0.046° (non-binary number of steps) [1]
Repeatability standard deviation σ_r	0.005° [2]

[1] In accordance with DIN ISO 1319-1, position of the upper and lower error limit depends on the installation situation, specified value refers to a symmetrical position, i.e. deviation in upper and lower direction is the same.

[2] In accordance with DIN ISO 55350-13; 68.3% of the measured values are inside the specified area.

INTERFACES

Communication interface	Parallel data world
Initialization time	80 ms [1]
Code type	Binary
Code sequence parameter adjustable	CW (clockwise) increasing when viewing the clockwise rotating shaft
Measured value backlash	0.005°
Response threshold	0.003°

[1] Valid positional data can be read once this time has elapsed.

ELECTRONICS

Connection type	Male connector, M23, 21-pin, radial
Supply voltage	10 ... 32 V
Operating current	Typ. 90 mA
Switching level of control inputs	Logic H = 0.7 x U_s, Logic L = 0 V ... 0.3 x U_s
Actuation of set button	≥ 100 ms [1]

[1] Only with shaft stationary (note initialisation time).

MECHANICS

Mechanical design	Through hollow shaft
Shaft diameter	12 mm [1]
Characteristics of the shaft	Front clamp
Weight	Approx. 0.3 kg [2]
Housing material	Aluminum die cast
Start up torque	Typ. 2.2 Ncm
Operating torque	Typ. 1.6 Ncm
Permissible movement static	± 0.3 mm (radial) ± 0.5 mm (axial)
Permissible movement dynamic	± 0.1 mm (radial) ± 0.2 mm (axial)
Operating speed	≤ 3,000 min^{-1}
Moment of inertia of the rotor	See figure
Bearing lifetime	3.6 x 10^9 revolutions
Angular acceleration	≤ 500,000 rad/s^2

[1] 12 mm requires the corresponding collet, this and other collets for 6, 8, 10 mm as well as 1/4", 3/8" and 1/2" need to be ordered separately as accessories.

[2] Based on devices with male connector.

AMBIENT DATA

EMC	According to EN 61000-6-2 and EN 61000-6-3 [1]
Enclosure rating	IP64, male connector (IEC 60529) [2]
Permissible relative humidity	90 % (Condensation not permitted)
Operating temperature range	–20 °C ... +85 °C
Storage temperature range	–40 °C ... +100 °C, without package
Resistance to shocks	50 g, 11 ms (EN 60068-2-27)
Resistance to vibration	20 g, 10 Hz ... 2,000 Hz (EN 60068-2-6)

[1] EMC according to the standards quoted is achieved if shielded cables are used.

[2] With mating connector fitted.

CERTIFICATES

EU declaration of conformity	✓
UK declaration of conformity	✓
ACMA declaration of conformity	✓
Moroccan declaration of conformity	✓
China RoHS	✓
cULus certificate	✓

Information according to Art. 3 of Data Act (Regulation EU 2023/2854)	✓

DIMENSIONAL DRAWING

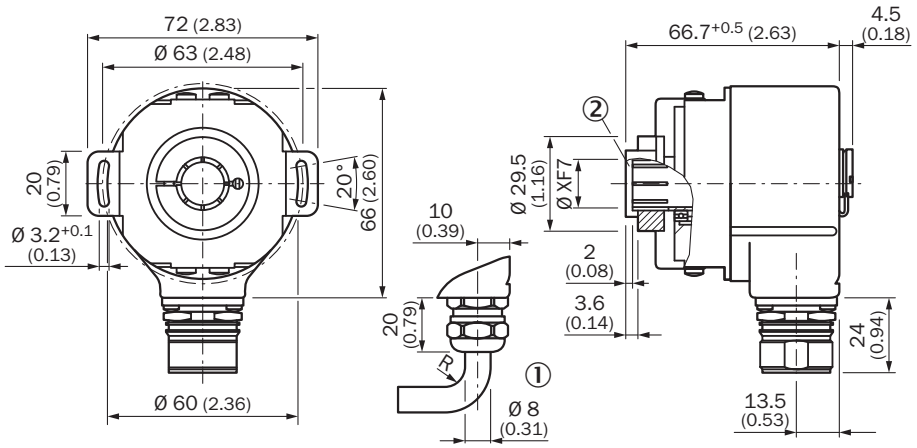

Dimensions in mm (inch)
General tolerances according to DIN ISO 2768-mk
① R = min. bending radius 40 mm
② Inseration depth of mounting shaft min. 15 mm

ANSCHLUSSBELEGUNG

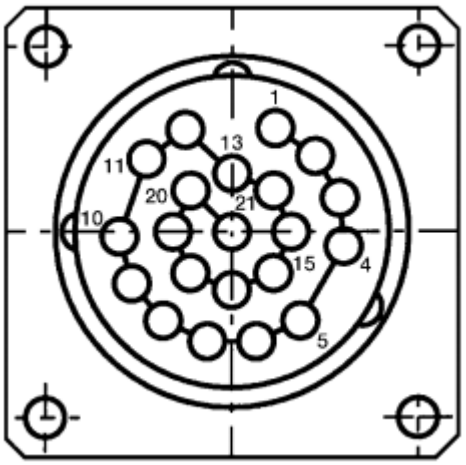

PIN	Wire colors (cable connection)	SignalBinary	SignalGray	SignalBCD	
1	Violet	2^0	G^0	2^0 v. 10^0	-
2	White/brown	2^1	G^1	2^1 v. 10^0	-
3	White/green	2^2	G^2	2^2 v. 10^0	-
4	White/yellow	2^3	G^3	2^3 v. 10^0	-
5	White/grey	2^4	G^4	2^0 v. 10^1	-
6	White/pink	2^5	G^5	2^1 v. 10^1	-
7	White/blue	2^6	G^6	2^2 v. 10^1	-
8	White/red	2^7	G^7	2^3 v. 10^1	-
9	White/black	2^8	G^8	2^0 v. 10^2	-

PIN	Wire colors (cable connection)	SignalBinary	SignalGray	SignalBCD	
10	Brown/green	2^{9}	G^{9}	2^{1} v. 10^{2}	-
11	Brown/yellow	2^{10}	G^{10}	2^{2} v. 10^{2}	-
12	Brown/gray	2^{11}	G^{11}	2^{3} v. 10^{2}	-
13	Brown/pink	2^{12}	G^{12}	2^{0} v. 10^{3}	-
14	Brown/blue	2^{13}	G^{13}	2^{1} v. 10^{3}	-
15	Brown/red	2^{14}	G^{14}	2^{2} v. 10^{3}	-
16	Green	Parity		Parity	
17	Pink		Store		-
18	Yellow		Enable		-
19	Brown		CW/CCW (V/R)		-
*	Gray		SET		-
20	Blue		GND		-
21	Red		U_s		-

DIAGRAMS

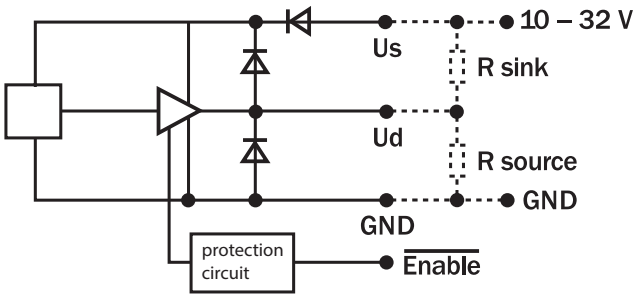

DIAGRAMS MOMENT OF INERTIA OF THE ROTOR

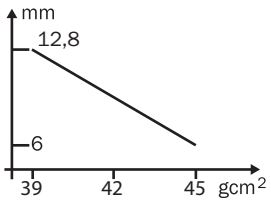

through hollow shaft

Further information as well as suitable accessories, example applications and downloads such as CAD dimensional models, operating instructions and software can be found at www.sick.com/1222624

SICK AG
WALDKIRCH
GERMANY
SICK.COM

SICK AT A GLANCE

SICK is a leading global technology company for intelligent sensors and integrated solutions in industrial automation. Our technologies set benchmarks, making your industrial processes more efficient, safer and more sustainable – both in logistics and manufacturing operations.

SICK combines sensor intelligence with industry expertise and certified consulting services. We provide the ideal foundation for scalable as well as tailor-made automation solutions and create added value along the entire value chain. Our close partnerships with our customers are more than just a promise: Together, we optimize productivity, improve quality, protect health and safety, and help build a sustainable future. All with empathy and trust.

Since 1946, we have been developing innovative technologies with passion and a pioneering spirit. With a global network in around 40 countries, SICK has a global presence and is always close by. The company's headquarters are located in Waldkirch near Freiburg, Germany. Our customers benefit from our understanding of both local and global requirements, which enables us to deliver tailor-made solutions

SICK

Sensor Intelligence