SICK.COM

DATA SHEET

V2D8509R-1MEKEXAF2SXXXX

Lector85x
Image-based code readers

SICK Sensor Intelligence

IMAGE-BASED CODE READERS

V2D8509R-1MEKEXAF2SXXXX

ORDERING INFORMATION

Type	part no.
V2D8509R-1MEKEXAF2SXXXX	1144348

Further device versions and accessories at www.sick.com/Lector85x

DETAILED TECHNICAL DATA

FEATURES

Application	Indoor area
Variant	Complete device
Optical focus	Dynamic focus control
Sensor	CMOS monochrome
Sensor resolution	4,096 px x 2,176 px (9 MP)
Illumination	Integrated
Illumination color	White, LED, Visible,
Anzahl LED	32
Aperture angle	47°, illumination
LED class	Risk group 1 (low risk) according to EC 62471-1: 2006-07 / EN 62471-1: 2008-09
Feedback spot	LED, Visible, green, 530 nm, ± 15 nm LED, Visible, Red, 660 nm, ± 20 nm
Alignment aid	Laser, Red, 630 nm ... 680 nm
Laser class	1, complies with 21 CFR 1040.10 except for the conformance according to “Laser Notice No. 56” from May 8, 2019 (EN 60825-1:2014+A11:2021, IEC 60825-1:2014)
Lens	
Focal length	25 mm
Scanning frequency	20 Hz, With resolution of 9 megapixels
Code resolution	≥ 0.1 mm
Working range	500 mm ... 2,400 mm

MECHANICS/ELECTRONICS

Connection type	1 x M12 ,17-pin male connector, A-coded (power, CAN, serial interface, I/O) 1 x M12, 5-pin female connector, A-coded (power, external illumination, I/O) 2 x M12, 4-pin socket, D-coded (100-Megabit Ethernet, dual port fieldbus) 1 x M12, 8-pin female connector, X-coded (Gigabit Ethernet)

[1] Voltage source in accordance with ES1 (EN 62368-1) or SELV (EN 60950-1).

[2] The typical power consumption depends on the product configuration. The specified value applies to digital outputs without load.

Supply voltage	24 V DC, ± 20 % [1]
Power consumption	Typ. 27 W [2]
Current consumption	≤ max. 2 A
Housing material	Aluminum die cast
Housing color	Anthracite gray (RAL 7016)
Window material	Glass (2 mm thick, scratch-proof coating)
Enclosure rating	IP65 (IEC 60529:2013 +C1:2013 +C2:2015 +AMD2 C1:2019, EN 60529:1991 +A1:2010 +A2:2013 +AC:2019-02)
Electrical safety	EN 61010:2010 / EN 61010-1:2010/A1:2019/AC:2019-04
Weight	975 g, without lens and connection cables
Dimensions (L x W x H)	143.4 mm x 90 mm x 106.1 mm
MTBF	100,000 h

[1] Voltage source in accordance with ES1 (EN 62368-1) or SELV (EN 60950-1).

[2] The typical power consumption depends on the product configuration. The specified value applies to digital outputs without load.

SAFETY-RELATED PARAMETERS

Conformities	Conformance Class B

PERFORMANCE

Readable code structures	1D codes, 2D codes, Stacked
Bar code types	Code 128, GS1-128, EAN 128, EAN 8, EAN 13, UPC-A, UPC-E, Interleaved 2 of 5, Codabar, Code 93, Postal code
2D code types	Data Matrix ECC200, GS1 Data-Matrix, MaxiCode, QR code, Aztec
Stacked code types	PDF417
Code qualification	On the basis of ISO/IEC 16022, ISO/IEC 15415, ISO/IEC 18004
Code printing process	Printed codes

INTERFACES

Ethernet		✓, TCP/IP
	Function	Data interface (read result output), service interface, FTP (image transmission)
	Data transmission rate	10/100/1,000 Mbit/s, MAC address (device-specific), see type label
EtherNet/IP™		✓ (2)
	Function	Data interface (read result output), Trigger interface
	Data transmission rate	10/100 MBit/s
CAN		✓
	Function	SICK CAN sensor network CSN (CAN controller/CAN device, multiplexer/server)
	Data transmission rate	20 kbit/s ... 1 Mbit/s
Serial		✓, RS-232, RS-422, RS-232
	Function	Data interface Service interface
	Data transmission rate	1.2 kBaud ... 115.2 kBaud 57.6 kBaud
USB		✓, USB 2.0
	Function	Service interface (accessing the web server), Ethernet via USB (RNDIS)
	Data transmission rate	480 Mbit/s
PROFINET		✓ (2)
	Function	Data interface (read result output), Trigger interface

[1] Memory card is available as an optional accessory. To ensure that the memory card functions reliably, only use card types (industrial standard) approved by SICK. Other functions are available upon request.

Data transmission rate	10/100 MBit/s
Fieldbus, industrial network	
Supported protocol versions	PROFINET specification V2.43
GSDML	According to GSDML specification V2.43
Conformance	Conformance Class B
Network management	SNMP, MIB-2, LLDP, MRP client support
Switch properties	2 port real-time switch compliant with IEEE 802
Port properties	100Base-TX, auto-negotiation, auto-crossover (MDIX), auto-polarity
Net load	Net load class III in accordance with security level 1 test
Digital inputs	2 (“Sensor 1”, “Sensor 2”, insulated, encoder input, external trigger)
Configurable digital inputs/outputs	
X1	4 (DIO 3, DIO 4, DIO 5, DIO 6)
X2	2 (DIO 7, DIO 8)
Reading pulse	Digital inputs, CAN, PROFINET via trigger bit, EtherNet/IP™ via trigger bit
Optical indicators	12 LEDs (10 x status displays, 2 x feedback spot)
Operator interfaces	Web server
Configuration software	SOPASair
Memory card slot	Micro SD memory card (not included with delivery) [1]
Parameter cloning	Micro SD memory card Control software
Data storage and retrieval	Image and data storage via external FTP
EncoderFrequency	Max. 50 kHz
Encoder resolution	0.2 mm ... 10 mm, per pulse
External illumination control	Via digital output (max. 24 V trigger)

[1] Memory card is available as an optional accessory. To ensure that the memory card functions reliably, only use card types (industrial standard) approved by SICK. Other functions are available upon request.

AMBIENT DATA

Electromagnetic compatibility (EMC)	
Interference resistance	IEC 61000-6-2:2016 / EN IEC 61000-6-2:2019
Interference emission	IEC 61000-6-4:2018 / EN IEC 61000-6-4:2019
Vibration resistance	EN 60068-2-6:2007, EN 60068-2-64:2019
Shock resistance	EN 60068-2-27:2008
Ambient operating temperature	0 °C ... +50 °C [1]
Storage temperature	–20 °C ... +70 °C
Relative humidity	≤ 90 %, Non-condensing
Ambient light immunity	2,000 lx, on code
Contamination rating	2 (EN 61010-1)
Altitude (above sea level)	< 5,000 m

[1] If the ambient operating temperature will be ≥ 45 °C, ensure adequate heat dissipation when mounting the device.

CERTIFICATES

EU declaration of conformity	✓
UK declaration of conformity	✓
ACMA declaration of conformity	✓
China RoHS	✓
cULus certificate	✓
Profinet certificate	✓
Ethernet/IP certificate	✓
BIS registration	✓

Information according to Art. 3 of Data Act (Regulation EU 2023/2854)	✓

DIMENSIONAL DRAWING

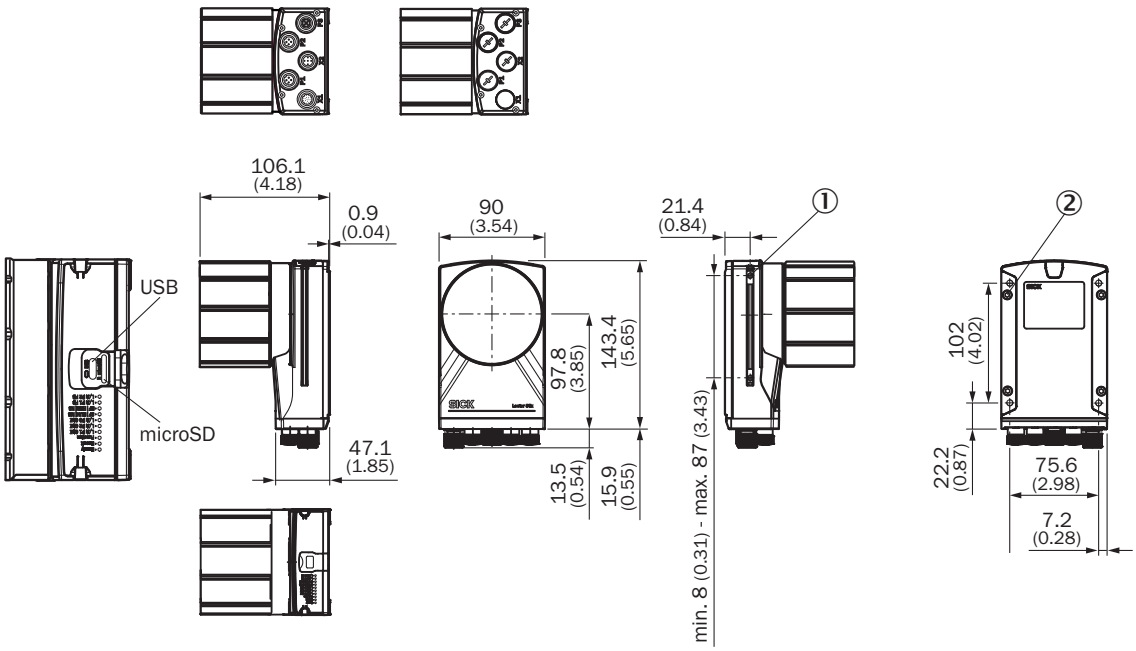

Dimensions in mm (inch)

FIELD OF VIEW

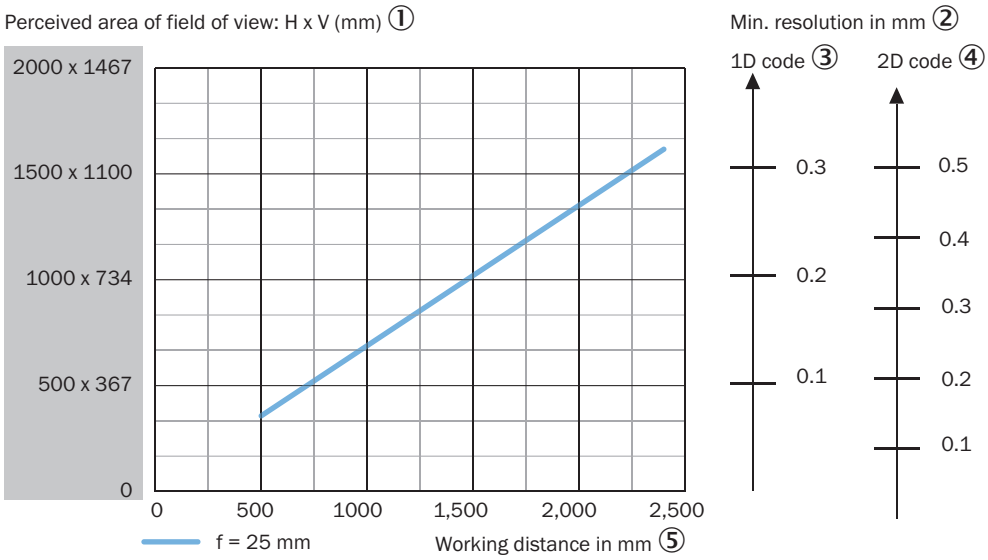

① perceived field of view area: horizontal x vertical (mm)
② Minimum resolution in mm
③ 1D code
④ 2D code
⑤ Working distance in mm (inch)

SELECTION GUIDE

FIELD OF VIEW

V2D8509R-xxxxxxxxxx, focal length: 25 mm

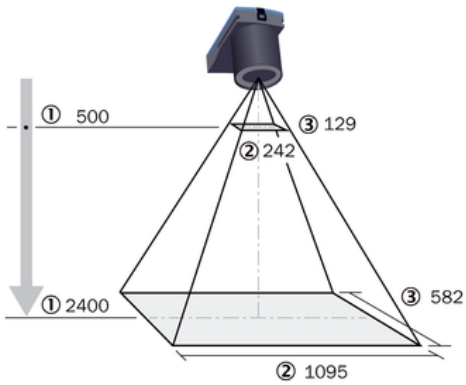

Fig. 2: Field of view of V2D8509R-xxxxxxxxxx, focal length: 25 mm, dynamic focus control

① Working distance in mm
② Perceived field of view area: horizontal (mm)
③ Perceived field of view area: vertical (mm)

Table 3: Perceived field of view area

Working distance (mm)	Horizontal (mm)	Vertical (mm)
500	242	129
1000	467	248
1500	691	367
2000	916	486
2400	1095	582

Table 4: Minimum resolution

Working distance (mm)	1D code (mm)	2D code (mm)
500	0.07	0.12
1000	0.14	0.23
1500	0.20	0.34
2000	0.27	0.45
2400	0.32	0.53

Further information as well as suitable accessories, example applications and downloads such as CAD dimensional models, operating instructions and software can be found at www.sick.com/1144348

SICK AG
WALDKIRCH
GERMANY
SICK.COM

SICK AT A GLANCE

SICK is a leading global technology company for intelligent sensors and integrated solutions in industrial automation. Our technologies set benchmarks, making your industrial processes more efficient, safer and more sustainable – both in logistics and manufacturing operations.

SICK combines sensor intelligence with industry expertise and certified consulting services. We provide the ideal foundation for scalable as well as tailor-made automation solutions and create added value along the entire value chain. Our close partnerships with our customers are more than just a promise: Together, we optimize productivity, improve quality, protect health and safety, and help build a sustainable future. All with empathy and trust.

Since 1946, we have been developing innovative technologies with passion and a pioneering spirit. With a global network in around 40 countries, SICK has a global presence and is always close by. The company's headquarters are located in Waldkirch near Freiburg, Germany. Our customers benefit from our understanding of both local and global requirements, which enables us to deliver tailor-made solutions

SICK
Sensor Intelligence