SICK.COM

DATA SHEET

DOL-1204-W25MRN

Sensor-actuator cables
Connectors and cables

SICK Sensor Intelligence

CONNECTORS AND CABLES

DOL-1204-W25MRN

ORDERING INFORMATION

Type	part no.
DOL-1204-W25MRN	6058481

Further device versions and accessories at www.sick.com/Sensor-actuator_cables

DETAILED TECHNICAL DATA

TECHNICAL SPECIFICATIONS

Connection type head A	Female connector, M12, 4-pin, angled
Connection type head B	Flying leads
Connection type	Flying leads
Connector material	PP
Connector color	Gray
Locking nut material	Stainless steel (V4A/1.4404)
Tightening torque	1 Nm
Width across flats	14
Cable	25 m, 4-wire, PP
Jacket material	PP [1]
Jacket color	Gray
Cable diameter	4.6 mm
Conductor cross section	0.34 mm²
Shielding	Unshielded
Bending radius	
Flexible use	> 10 x cable diameter
Stationary position	> 5 x cable diameter
Bending cycles	≥ 4,000,000
Reference voltage	≤ 250 V
Rated impulse voltage	2.5 kV
Current loading	4 A
Signal type	Sensor/actuator cable
Torsion force	180° / 1 m
Application	Hygienic and washdown zones Drag chain operation

[1] Silicone-free, halogen-free, LABS-free.

[2] Tested cleaning agents: 3% P3 – topax 990, 5% P3 – topoactive 200, 5% P3 – topax 52, 3% P3 – topax 66, 3% P3 – topactive OKTO; Insulating material group: Cat I.

	Robot Cold bending resistant Seawater resistant
Note	This product is generally resistant to chemical cleaning agents (see ECOLAB) and other chemical compounds such as H2O2 and CH2O2. Before permanent installation is carried out, the material's resistance to the cleaning agent being used must be checked. [2] Resistant against lactic acid & hydrogen peroxide (H2O2)
Enclosure rating	IP67/ IP69K
Operating temperature	
Flexible use	–25 °C ... +105 °C
Stationary position	–40 °C ... +105 °C

[1] Silicone-free, halogen-free, LABS-free.

[2] Tested cleaning agents: 3% P3 – topax 990, 5% P3 – topoactive 200, 5% P3 – topax 52, 3% P3 – topax 66, 3% P3 – topactive OKTO; Insulating material group: Cat I.

CERTIFICATES

EU declaration of conformity	✓
UK declaration of conformity	✓
China RoHS	✓
China Compulsory Product Certification (CCC) exempt	✓
ECOLAB certificate	✓

DIMENSIONAL DRAWING

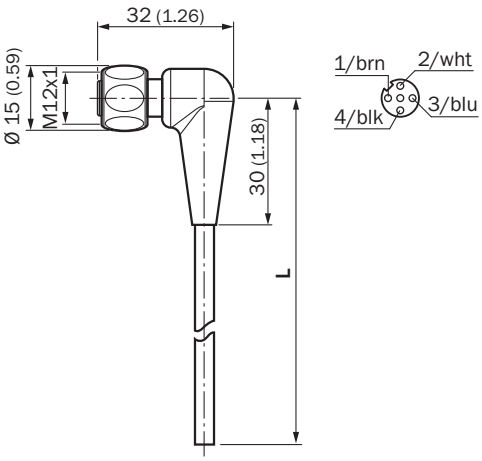

Dimensions in mm (inch)

Further information as well as suitable accessories, example applications and downloads such as CAD dimensional models, operating instructions and software can be found at www.sick.com/6058481

SICK AG
WALDKIRCH
GERMANY
SICK.COM

SICK AT A GLANCE

SICK is a leading global technology company for intelligent sensors and integrated solutions in industrial automation. Our technologies set benchmarks, making your industrial processes more efficient, safer and more sustainable – both in logistics and manufacturing operations.

SICK combines sensor intelligence with industry expertise and certified consulting services. We provide the ideal foundation for scalable as well as tailor-made automation solutions and create added value along the entire value chain. Our close partnerships with our customers are more than just a promise: Together, we optimize productivity, improve quality, protect health and safety, and help build a sustainable future. All with empathy and trust.

Since 1946, we have been developing innovative technologies with passion and a pioneering spirit. With a global network in around 40 countries, SICK has a global presence and is always close by. The company's headquarters are located in Waldkirch near Freiburg, Germany. Our customers benefit from our understanding of both local and global requirements, which enables us to deliver tailor-made solutions

SICK
Sensor Intelligence