SICK.COM

DATA SHEET

PFT-FRB1X0SF1OSSALSSZ

PFT
Pressure sensors

SICK Sensor Intelligence

Illustration may differ

PRESSURE SENSORS

PFT-FRB1X0SF1OSSALSSZ

ORDERING INFORMATION

Type	part no.
PFT-FRB1X0SF1OSSALSSZ	6042793

Further device versions and accessories at www.sick.com/PFT

DETAILED TECHNICAL DATA

FEATURES

Medium	Liquid, gaseous
Pressure type	Gauge pressure
Pressure unit	bar
Measuring range	0 bar ... 1 bar
Process temperature	–30 °C ... +100 °C
Maximum ohmic load R_A	4 mA ... 20 mA, 2-wire ($R_A \leq (L^+ - 10\ V) / 0.02\ A$ [Ohm]) , 0 V ... 5 V, 3-wire (R_A > 5 kOhm), 0 V ... 10 V, 3-wire (R_A > 10 kOhm)
Output signal	4 mA ... 20 mA, 2-wire

MECHANICS/ELECTRONICS

Communication interface	-
Process connection	G 1 B flush-mounted
Wetted parts	Flush-mounted membrane: Stainless steel 316Ti Seals: NBR
Internal transmission fluid	Synthetic oil (Not available for version with standard membrane for pressure ranges > 25 bar)
Pressure port	Front-flush membrane
Housing material	Stainless steel 1.4571
Connection type	L-connector (DIN EN 175301-803 A)
Supply voltage	10 V DC ... 30 V DC
Electrical safety	Overvoltage protection: 36 V DC Short-circuit protection: Q_A towards M Reverse polarity protection: L^+ to M Protection class: III
Dielectric strength	500 V DC, NEC Class 02 power supply (low voltage and low current max. 100 VA even in the event of a fault)
CE-conformity	Pressure equipment directive: 2014/68/EU

[1] Enclosure rating IP per IEC 60529. The enclosure rating classes specified only apply when connected with female connectors that provide the corresponding enclosure rating.

	EMC directive: 2004/108/EC, EN 61326-2-3
Weight sensor	Approx. 200 g
Seal	NBR
Enclosure rating	IP65 [1]
Protection class III	✓
MTTF	403 years
Pressure peak dampening	Through optional integrated pressure port 0.6 mm or 0.3 mm for process connector G ¼ according to DIN 3852-E

[1] Enclosure rating IP per IEC 60529. The enclosure rating classes specified only apply when connected with female connectors that provide the corresponding enclosure rating.

PERFORMANCE

Non-linearity	≤ ± 0.2 %, of span (Best Fit Straight Line, BFSL) according to IEC 61298-2
Accuracy	≤ ± 0.5 %, of the span (= ± 0.25% of the span (optionally for pressure ranges = 0.25 bar). applies inclusive of nonlinearity, hysteresis, non-repeatability, zero-point and full-scale error (corresponds to error of measurement as per IEC 61298-2) Calibrated with vertical installation position)
Non-repeatability	≤ ± 0.1 % of the span
Response time (10 % ... 90 %)	≤ 1 ms ≤ 10 ms at medium temperatures below < –30°C for pressure ranges up to 25 bar or with flush-mounted membrane
Long-term drift/one-year stability	≤ ± 0.2 % of span (at reference conditions)
Temperature coefficient in rated temperature range	Mean TC of zero: ≤ 0.2 % of span / 10 K (< 0.4 % for pressure ranges ≤ 0.25 bar) Mean TC of span ≤ 0.2 % of span / 10 K
Rated temperature range	0 °C ... +80 °C
Service life	Minimum 10 Mio. load cycles

AMBIENT DATA

Ambient temperature, operation	–20 °C ... +80 °C
Storage temperature	–40 °C ... +100 °C, with flush-mounted membrane and cooling element –20 °C ... +100 °C
Shock load	1000 g according to IEC 60068-2-27 (mechanical shock) 400 g according to IEC 60068-2-27 (mechanical shock) for version with integrated cooling element
Vibration load	20 g according to IEC 60068-2-6 (vibration under resonance) 10 g according to IEC 60068-2-6 (vibration undencr resonae) for version with integrated cooling element

CERTIFICATES

EU declaration of conformity	✓
UK declaration of conformity	✓
China RoHS	✓
China Compulsory Product Certification (CCC) exempt	✓

DIMENSIONAL DRAWING G 1 B WITH COOLING SECTION

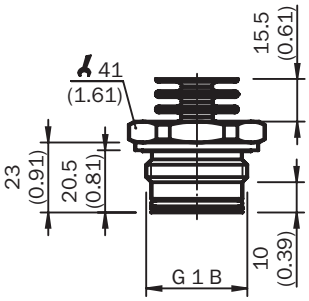

Dimensions in mm (inch)

DIMENSIONAL DRAWING G 1 B WITHOUT COOLING SECTION

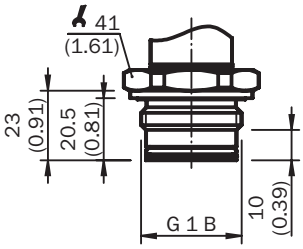

Dimensions in mm (inch)

DIMENSIONAL DRAWING HOUSING WITH L-CONNECTOR (DIN EN 175301-803 A)

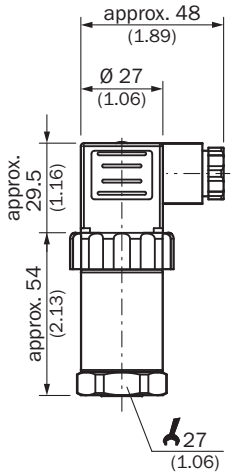

Dimensions in mm (inch)

CONNECTION TYPE

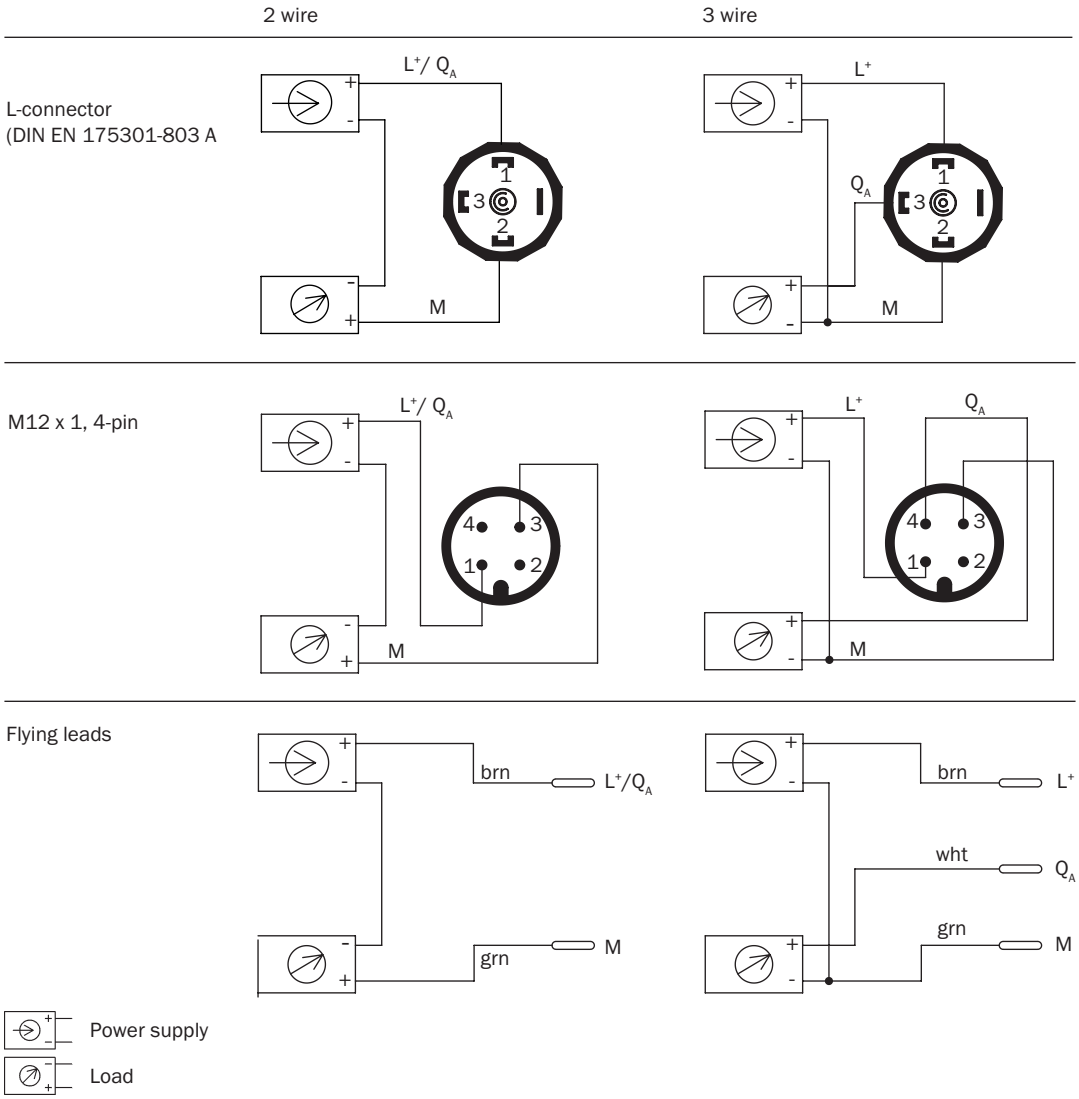

Further information as well as suitable accessories, example applications and downloads such as CAD dimensional models, operating instructions and software can be found at www.sick.com/6042793

SICK AG
WALDKIRCH
GERMANY
SICK.COM

SICK AT A GLANCE

SICK is a leading global technology company for intelligent sensors and integrated solutions in industrial automation. Our technologies set benchmarks, making your industrial processes more efficient, safer and more sustainable – both in logistics and manufacturing operations.

SICK combines sensor intelligence with industry expertise and certified consulting services. We provide the ideal foundation for scalable as well as tailor-made automation solutions and create added value along the entire value chain. Our close partnerships with our customers are more than just a promise: Together, we optimize productivity, improve quality, protect health and safety, and help build a sustainable future. All with empathy and trust.

Since 1946, we have been developing innovative technologies with passion and a pioneering spirit. With a global network in around 40 countries, SICK has a global presence and is always close by. The company's headquarters are located in Waldkirch near Freiburg, Germany. Our customers benefit from our understanding of both local and global requirements, which enables us to deliver tailor-made solutions

SICK
Sensor Intelligence