SICK.COM



DATA SHEET

V2D652R-MCXXH6

Lector64x/Lector65x
Image-based code readers

SICK Sensor Intelligence



IMAGE-BASED CODE READERS

V2D652R-MCXXH6

ORDERING INFORMATION

Type	part no.
V2D652R-MCXXH6	1075975

Further device versions and accessories at www.sick.com/Lector64x_Lector65x

DETAILED TECHNICAL DATA

FEATURES

Variant	Main unit
Optical focus	Adjustable focus (manual)
Sensor	CMOS monochrome
Sensor resolution	2,048 px x 1,088 px (2.1 MP)
Illumination	To be ordered separately as accessories
Alignment aid	Laser, Red, 630 nm ... 680 nm
Laser class	1, Complies with 21 CFR 1040.10 and 1040.11 except for conformance with IEC 60825-1 Ed.3., as described in “Laser Notice No. 56” dated May 8, 2019 (IEC 60825-1:2014, EN 60825-1:2014+A11:2021)
Lens	C-mount
Optical format	1″
Note	To be ordered separately as accessories
Scanning frequency	70 Hz, With resolution of 2 megapixels
Code resolution	≥ 0.1 mm [1]
Working range	300 mm ... 2,200 mm [1] [2]

[1] Depends on lens used.

[2] For details see field of view diagram.

MECHANICS/ELECTRONICS

Connection type	1 x M12, 17-pin plug (serial, CAN, I/Os, power supply) 1 x M12, 8-pin socket (Ethernet, 1 GBit/s) 1 x M8, 4-pin socket (USB) 2 x M12, 4-pin female connector (Ethernet, 100 mBit/s)
Supply voltage	24 V DC, ± 20 %
Power consumption	Typ. 20 W, ± 20 %
Output current	≤ 100 mA
Housing material	Aluminum die cast

[1] Housing only, without lens and optics protection hood.

Housing color	Light blue (RAL 5012)
Window material	Plastic (To be ordered separately as accessories) Glass (To be ordered separately as accessories)
Enclosure rating	IP65 (EN 60529 (1991-10), EN 60529/A2 (2002-02))
Protection class	III
Electrical safety	EN 60950-1 (2011-01)
Weight	635 g
Dimensions (L x W x H)	142 mm x 89 mm x 46 mm [1]
MTBF	100,000 h

[1] Housing only, without lens and optics protection hood.

PERFORMANCE

Readable code structures	1D codes, Stacked, 2D codes
Bar code types	GS1-128 / EAN 128, UPC / GTIN / EAN, Interleaved 2 of 5, Pharmacode, GS1 DataBar, Code 39, Code 128, Codabar, Code 32, Code 93, USPS (Postnet, Planet, USPS4SCB), Australian Post, Dutch KIX Post, Royal Mail, Swedish Post
2D code types	Data Matrix ECC200, GS1 Data-Matrix, MaxiCode, QR code
Stacked code types	PDF417
Code qualification	On the basis of ISO/IEC 16022, ISO/IEC 15415, ISO/IEC 18004
Internal image storage	512 MB

INTERFACES

Ethernet	✓, TCP/IP
Function	Data interface (read result output), Service interface, FTP (image transmission)
Data transmission rate	10/100/1,000 Mbit/s
PROFINET	✓
Function	PROFINET Single Port, PROFINET Dual Port
EtherNet/IP™	✓
Data transmission rate	10/100/1,000 Mbit/s
Serial	✓, RS-232, RS-422
Function	Data interface (read result output), Service interface
Data transmission rate	0.3 kBaud ... 115.2 kBaud, AUX: 57.6 kBaud (RS-232)
CAN	✓
Function	SICK CAN sensor network CSN (CAN controller/CAN device, multiplexer/server)
Data transmission rate	20 kbit/s ... 1 Mbit/s
PROFIBUS DP	✓
Type of fieldbus integration	Optional over external fieldbus module CDF600-2
Digital inputs	4 (“Sensor 1”, “Sensor 2”, 2 inputs via optional CMC600 parameter memory in CDB650/CDM420)
Configurable inputs	Encoder input, external trigger
Digital outputs	6 (CDB650: “Result 1”, “Result 2”, “Result 3”, “Result 4”, 2 external outputs via CMC600 or CDM420: “Result 1”, “Result 2”, 2 external outputs via CMC600 or cable with open end: “Result 1”, “Result 2”, “Result 3”, “Result 4”)
Configurable outputs	Good read, External illumination control, free configurable output condition, "device ready"
Reading pulse	Digital inputs, non-powered, serial interface, Ethernet, CAN, auto pulse, presentation mode
Optical indicators	21 LEDs (10 x status display, 10 x LED bar graph, 1 green feedback spot)
Acoustic indicators	Beeper/buzzer (can be switched off, can be assigned a function to signal a result)
Control elements	2 buttons (choose and start/stop functions)
Operator interfaces	Web server
Configuration software	SOPAS ET
Memory card	Micro SD memory card (flash card) max. 16 GB, optional
Data storage and retrieval	Image and data storage via microSD memory card and external FTP
EncoderFrequency	Max. 1 kHz

External illumination control	Via digital output (max. 24 V trigger) or external illumination connection

AMBIENT DATA

Electromagnetic compatibility (EMC)	EN 61000-6-2:2005-08 / EN 61000-6-3 (2007-01)
Vibration resistance	EN 60068-2-6:2008-02
Shock resistance	EN 60068-2-6
Ambient operating temperature	0 °C ... +50 °C
Storage temperature	–20 °C ... +70 °C
Relative humidity	90 %, Non-condensing
Ambient light immunity	2,000 lx, on code

CERTIFICATES

EU declaration of conformity	✓
UK declaration of conformity	✓
ACMA declaration of conformity	✓
China RoHS	✓
cULus certificate	✓
Profinet certificate	✓
BIS registration	✓
Information according to Art. 3 of Data Act (Regulation EU 2023/2854)	✓

DIMENSIONAL DRAWING

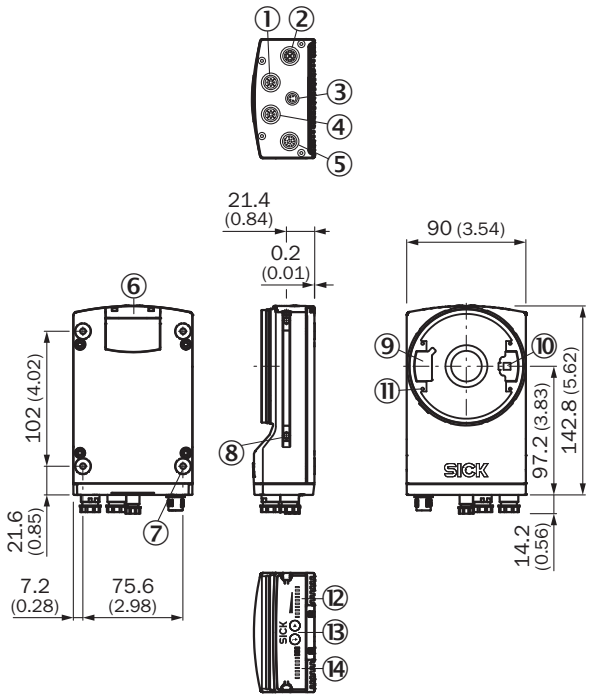

Dimensions in mm (inch)
① P1/P2 connection “Ethernet”, 100 mBit/s
② P3 connection “Ethernet”, 1 GBit/s
③ X2 “USB” connection or “trigger external lighting”, depending on type
④ P1/P2 connection “Ethernet”, 100 mBit/s
⑤ X1 “Power/Serial Data/CAN/I/O” connection or “CAN IN”, depending on type
⑥ cover for the microSD memory card
⑦ M5 blind tapped holes, 5 mm deep (4 x), for mounting the sensor
⑧ sliding nut M5, 5.5 mm deep (2 x), for mounting (as alternative)
⑨ plug connector for connecting the integrated lighting
⑩ laser alignment aid exit
⑪ 2.5 mm blind tapped holes (4 x) for mounting the spacers for the integrable illumination
⑫ Bar graph display
⑬ Function button (2 x)
⑭ LED for status display (2 levels), 10 x

FIELD OF VIEW, LECTOR65X FLEX WITH PANORAMA 50 MM

Dimensions in mm (inch/*mil)

Max. code size	72 (2.83)	105 (4.13)	133 (5.24)	162 (6.38)	190 (7.48)
Min. resolution 1D-Code	0.11 (*4.1)	0.16 (*6.1)	0.20 (*8.1)	0.25 (*10.0)	0.30 (*12.0)
Min. resolution 2D-Code	0.14 (*5.5)	0.21 (*8.2)	0.27 (*10.8)	0.34 (*13.4)	0.41 (*16.0)

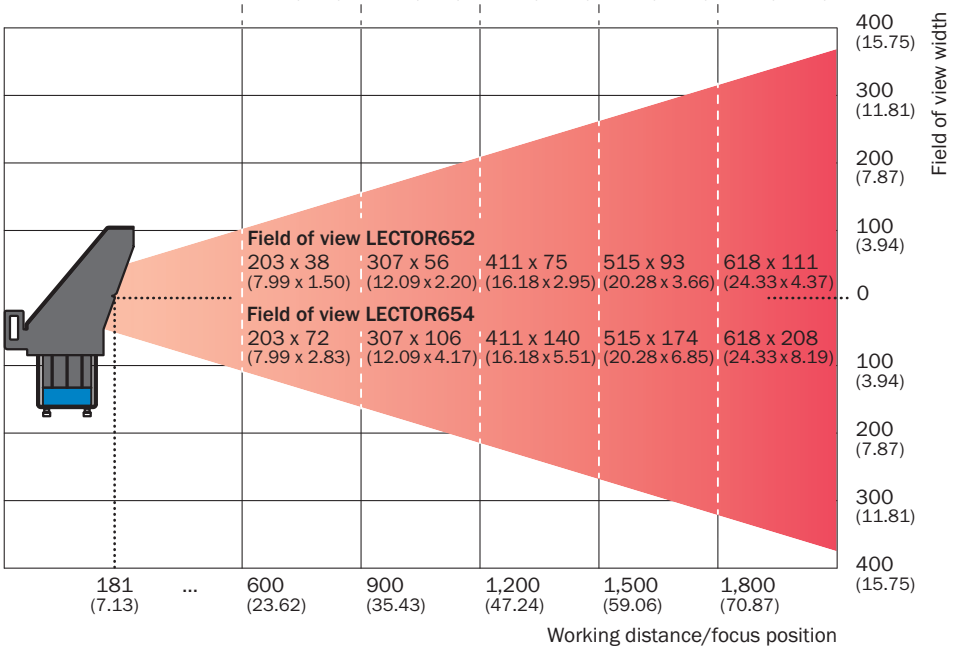

FIELD OF VIEW, LECTOR65X FLEX WITH PANORAMA 35 MM/40 MM

Dimensions in mm (inch/*mil)

Max. code size	39 (1.54)	66 (2.60)	92 (3.62)	118 (4.65)	144 (5.67)
Min. resolution 1D-Code	0.11 (*4.2)	0.18 (*7.0)	0.25 (*9.9)	0.32 (*12.7)	0.39 (*15.5)
Min. resolution 2D-Code	0.14 (*5.6)	0.24 (*9.4)	0.33 (*13.2)	0.43 (*16.9)	0.53 (*20.7)

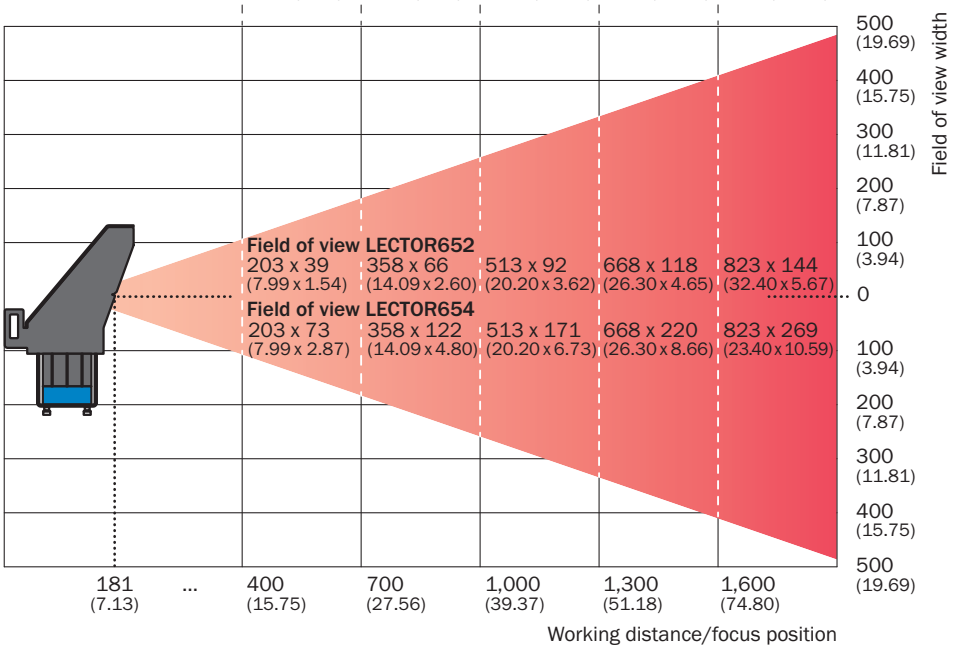

FIELD OF VIEW LECTOR65X WITH PANORAMA 25 MM

Dimensions in mm (inch/*mil)

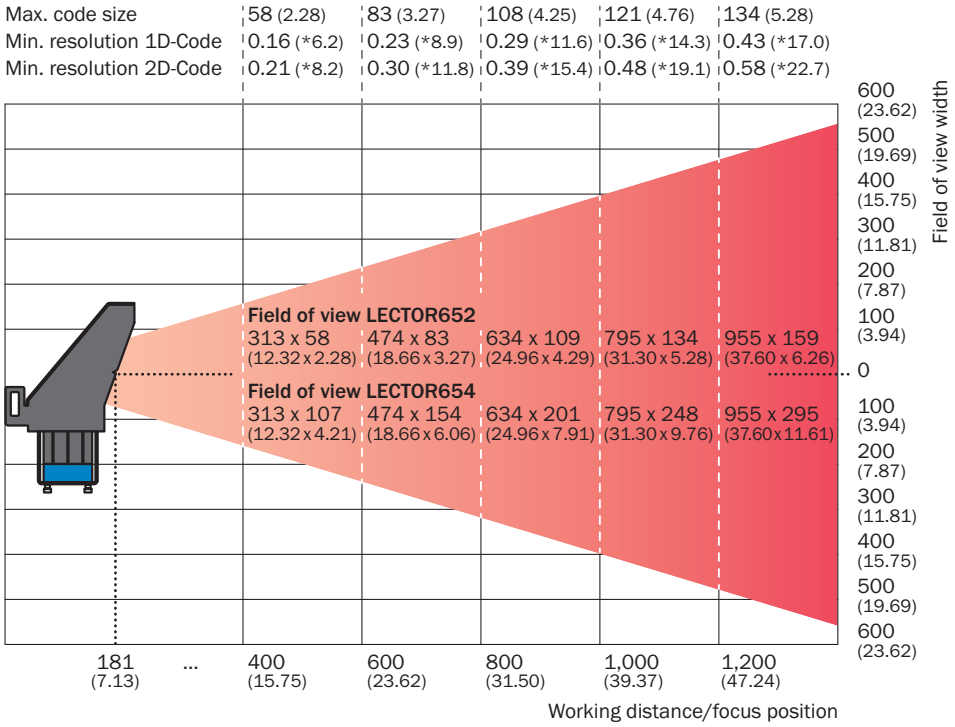

FIELD OF VIEW

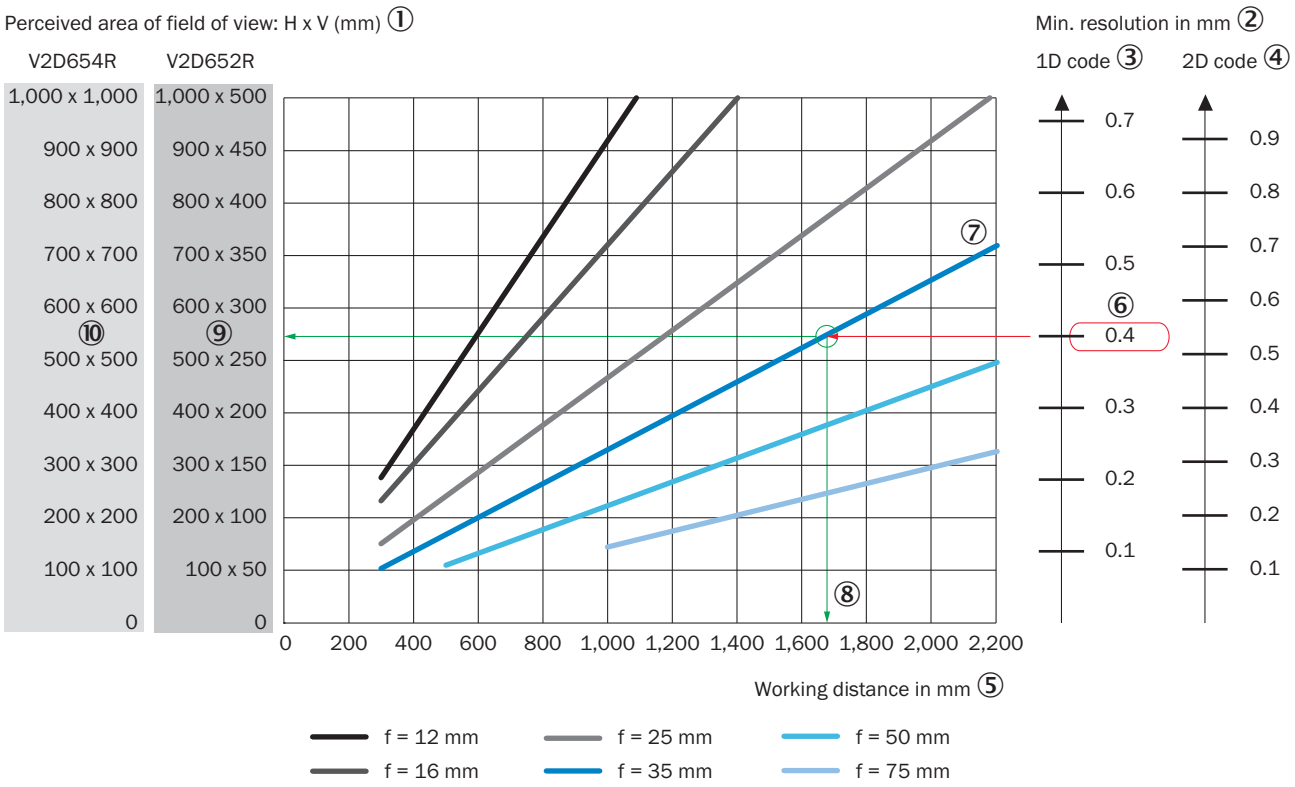

① perceived field of view area: horizontal x vertical (mm)
② Minimum resolution in mm
③ 1D code
④ 2D code
⑤ Working distance in mm
⑥ Selected code resolution
⑦ Focal length of lens, here example for f = 35.0 mm
⑧ Reading off: resultant maximum working distance
⑨ Reading off: Resulting perceived area of the field of view V2D652R (mm x mm)
⑩ Reading off: Resulting perceived area of the field of view V2D654R (mm x mm)

SELECTION GUIDE



Body, incl. C-mount module	C-mount lens	Spacer	Integratable illumination	Lens protective hood	Assembled device, incl. all mentioned parts
Lector652 V2D652R-MCXXA6 1063404	Focal length **12.5 mm** Aperture **F1.4–16** 5327522	Spacer for mounting the integrable illumination 2069007	**Wide, white** 2069006		
			Wide, blue 2074009		
			Wide, red 2074003		
Lector652 V2D652R-MCXXH6 1075975	Focal length **16 mm** Aperture **F1.4–16** 5327523	Spacer for mounting the integrable illumination 2069007	**Wide, white** 2069006		
			Wide, blue 2074009		
			Wide, red 2074003		
Lector652 V2D652R-MCXXF6 1071728	Focal length **25 mm** Aperture **F1.4–16** 5327524	Spacer for mounting the integrable illumination 2069007	**Medium, white** 2074001	**Medium 74.5 mm** Glass window 2066565	
Lector654 V2D654R-MCXXA6 1060892			**Medium, blue** 2074012		
Lector654 V2D654D-MCXXA6 1082400			**Medium, red** 2074005		
Lector654 V2D654R-MCXXH6 1083896	Focal length **35 mm** Aperture **F1.4–16** 5327525	Spacer for mounting the integrable illumination 2069007	**Narrow, white** 2069099		
Lector654 V2D654R-MCXXF6 1068496			**Narrow, blue** 2074007		
			Narrow, red 2066563		
	Focal length **50 mm** Aperture **F1.4–16** 5327526	Spacer for mounting the integrable illumination 2069007	**Narrow, white** 2069099		
			Narrow, blue 2074007		
			Narrow, red 2066563		
	Focal length **75 mm** Aperture **F1.8–16** 5327527	Spacer for mounting the integrable illumination 2069007	**Narrow, white** 2069099		
			Narrow, blue 2074007		
			Narrow, red 2066563		

Further information as well as suitable accessories, example applications and downloads such as CAD dimensional models, operating instructions and software can be found at www.sick.com/1075975

SICK AG
WALDKIRCH
GERMANY
SICK.COM

SICK AT A GLANCE

SICK is a leading global technology company for intelligent sensors and integrated solutions in industrial automation. Our technologies set benchmarks, making your industrial processes more efficient, safer and more sustainable – both in logistics and manufacturing operations.

SICK combines sensor intelligence with industry expertise and certified consulting services. We provide the ideal foundation for scalable as well as tailor-made automation solutions and create added value along the entire value chain. Our close partnerships with our customers are more than just a promise: Together, we optimize productivity, improve quality, protect health and safety, and help build a sustainable future. All with empathy and trust.

Since 1946, we have been developing innovative technologies with passion and a pioneering spirit. With a global network in around 40 countries, SICK has a global presence and is always close by. The company's headquarters are located in Waldkirch near Freiburg, Germany. Our customers benefit from our understanding of both local and global requirements, which enables us to deliver tailor-made solutions

SICK

Sensor Intelligence