SICK.COM

DATA SHEET

WTB4FP-2216R250A00

W4
Photoelectric sensors

Sensor Intelligence

Illustration may differ

PHOTOELECTRIC SENSORS

WTB4FP-2216R250A00

ORDERING INFORMATION

Type	part no.
WTB4FP-2216R250A00	1121418

Further device versions and accessories at www.sick.com/W4

DETAILED TECHNICAL DATA

FEATURES

Functional principle	Photoelectric proximity sensor
Functional principle detail	Background suppression, MultiSwitch, NarrowBeam, distance value
Sensing range	
Sensing range min.	4 mm
Sensing range max.	100 mm
Adjustable switching threshold for background suppression	15 mm ... 100 mm
Reference object	Object with 90% remission factor (complies with standard white according to DIN 5033)
Minimum distance between set sensing range and background (black 6% / white 90%)	5 mm, at a distance of 40 mm
Recommended sensing range for the best performance	30 mm ... 60 mm
Distance value	
Measuring range	15 mm ... 100 mm
Repeatability	0,3 mm ... 1,5 mm [1) 2) 3)]
Accuracy	Typ. 0.8 mm at 15 ... 60 mm distance [1)] Typ. 2.0 mm at 60 ... 100 mm distance [1)]
Distance value output	Via IO-Link
Resolution	1 mm
Update rate of the distance value	20 ms
Emitted beam	
Light source	PinPoint LED
Type of light	Visible red light
Shape of light spot	Point-shaped
Light spot size (distance)	Ø 2 mm (50 mm)

[1)] 6% ... 90% remission factor.

[2)] Equivalent to 1 σ.

[3)] See repeatability characteristic lines.

Maximum dispersion of the emitted beam around the standardized transmission axis (squint angle)	< +/- 1.5° (at T_U = +23 °C)
Key LED figures	
Normative reference	EN 62471:2008-09 | IEC 62471:2006, modified
LED risk group marking	Free group
Wave length	635 nm
Average service life	100,000 h at T_a = +25 °C
Smallest detectable object (MDO) typ.	0.1 mm, At 50 mm distance (object with 90% remission (complies with standard white according to DIN 5033))
Adjustment	
Teach-in button	BluePilot For setting the sensing range
IO-Link	For configuring the sensor parameters and Smart Task functions
Display	
LED blue	BluePilot: Display of mode, display of output states Q_{L1} (LED 1-3 permanently on) and Q_{L2} (LED 5-7 permanently on)
LED green	Operating indicator Static on: power on Flashing: IO-Link mode
LED yellow	Status of received light beam Static on: object present Static off: object not present
Special applications	Detecting flat objects, Detecting small objects

[1] 6% ... 90% remission factor.

[2] Equivalent to 1 σ.

[3] See repeatability characteristic lines.

SAFETY-RELATED PARAMETERS

$MTTF_D$	642 years
DC_{avg}	0 %
T_M (mission time)	20 years

COMMUNICATION INTERFACE

IO-Link	✓, IO-Link V1.1
Data transmission rate	COM2 (38,4 kBaud)
Cycle time	2.3 ms
Process data length	16 Bit
Process data structure	Bit 0 = switching signal Q_{L1} Bit 1 = switching signal Q_{L2} Process data structure: A: Bit 2 ... 15 = Current receiver level (live). Process data structure B: Bit 2 ... 15 = Distance to object. Can be switched between A and B via IO-Link.
VendorID	26
DeviceID HEX	0x8002C3
DeviceID DEC	8389315
Compatible master port type	A
SIO mode support	Yes

ELECTRONICS

Supply voltage U_B	10 V DC ... 30 V DC [1]

[1] Limit values.

[2] Signal transit time with resistive load in switching mode.

[3] With light/dark ratio 1:1.

[4] This switching output must not be connected to another output.

Ripple	≤ 5 V_{pp}
Usage category	DC-12 (According to EN 60947-5-2) DC-13 (According to EN 60947-5-2)
Current consumption	≤ 25 mA, without load. At U_B = 24 V
Protection class	III
Digital output	
Number	2 (individually adjustable)
Type	Push-pull: PNP/NPN
Signal voltage PNP HIGH/LOW	Approx. U_B-2.5 V / 0 V
Signal voltage NPN HIGH/LOW	Approx. U_B / < 2.5 V
Output current $I_{max.}$	≤ 100 mA
Circuit protection outputs	Reverse polarity protected Overcurrent protected Short-circuit protected
Response time	≤ 1,000 µs [2]
Repeatability (response time)	360 µs
Switching frequency	500 Hz [3]
Pin/Wire assignment	
Function of pin 4/black (BK)	Digital output, dark switching, object present → output Q_{L1} LOW; IO-Link communication C [4]
Function of pin 4/black (BK) – detail	The pin 4 function of the sensor can be configured Additional possible settings via IO-Link
Function of pin 2/white (WH)	Digital output, dark switching, object present → output Q_{L2} LOW [4]
Function of pin 2/white (WH) – detail	The pin 2 function of the sensor can be configured Additional possible settings via IO-Link

[1] Limit values.

[2] Signal transit time with resistive load in switching mode.

[3] With light/dark ratio 1:1.

[4] This switching output must not be connected to another output.

MECHANICS

Housing	Rectangular
Design detail	Flat
Dimensions (W x H x D)	16 mm x 40.1 mm x 12.1 mm
Connection	Male connector M8, 4-pin
Material	
Housing	Plastic, VISTAL®
Front screen	Plastic, PMMA
Male connector	Plastic, VISTAL®
Weight	Approx. 30 g
Maximum tightening torque of the fixing screws	0.4 Nm

AMBIENT DATA

Enclosure rating	IP66 (EN 60529) IP67 (EN 60529)
Ambient operating temperature	–40 °C ... +60 °C
Ambient temperature, storage	–40 °C ... +75 °C
Typ. Ambient light immunity	Artificial light: ≤ 50,000 lx Sunlight: ≤ 50,000 lx
Shock resistance	30 g, 11 ms (3 positive and 3 negative shocks along X, Y, Z axes, 18 total shocks (EN60068-2-27))
Vibration resistance	10 Hz ... 1,000 Hz (Amplitude 1 mm, 3 x 30 min (EN60068-2-6))
Air humidity	35 % ... 95 %, relative humidity (no condensation)
Electromagnetic compatibility (EMC)	EN 60947-5-2
Resistance to cleaning agent	ECOLAB

UL File No.	NRKH.E181493 & NRKH7.E181493

SMART TASK

Smart Task name	Base logics
Logic function	Direct AND OR Window Hysteresis
Timer function	Deactivated Switch-on delay Off delay ON and OFF delay Impulse (one shot)
Inverter	Yes
Switching frequency	SIO Logic: 450 Hz [1] IOL: 450 Hz [2]
Response time	SIO Logic: 1100 µs [1] IOL: 1100 µs [2]
Repeatability	SIO Logic: 400 µs [1] IOL: 450 µs [2]
Switching signal	
Switching signal Q_{L1}	Switching output
Switching signal Q_{L2}	Switching output

[1] Use of Smart Task functions without IO-Link communication (SIO mode).

[2] Use of Smart Task functions with IO-Link communication function.

DIAGNOSIS

Device temperature	
Measuring range	Very cold, cold, moderate, warm, hot
Device status	Yes
Detailed device status	Yes
Operating hour counter	Yes
Operating hours counter with reset function	Yes
Quality of teach	Yes

CERTIFICATES

EU declaration of conformity	✓
UK declaration of conformity	✓
ACMA declaration of conformity	✓
Moroccan declaration of conformity	✓
China RoHS	✓
China Compulsory Product Certification (CCC) exempt	✓
ECOLAB certificate	✓
cULus certificate	✓
IO-Link certificate	✓
Photobiological safety (DIN EN 62471) certificate	✓
Information according to Art. 3 of Data Act (Regulation EU 2023/2854)	✓

DISPLAY AND ADJUSTMENT ELEMENTS

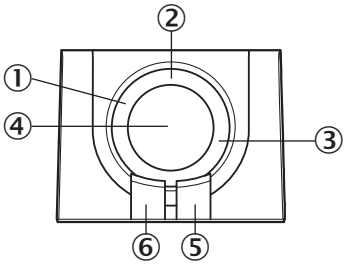

① LED blue
② indicator switching output mode
③ indicator distance mode
④ Teach-in button
⑤ LED yellow
⑥ LED green

CONNECTION TYPE MALE CONNECTOR M8, 4-PIN

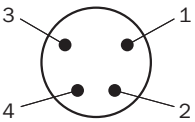

CONNECTION DIAGRAM CD-520

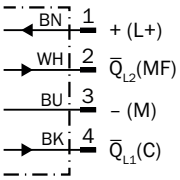

TRUTH TABLE PUSH-PULL: PNP/NPN - LIGHT SWITCHING Q_{L2}

	Light switching Q_{L2} (normally open (upper switch), normally closed (lower switch))	
	Object not present ➜ Output LOW	Object present ➜ Output HIGH
Light receive	✗	✓
Light receive indicator	✗	●
Load resistance to L+	⚠	✗
Load resistance to M	✗	⚠
	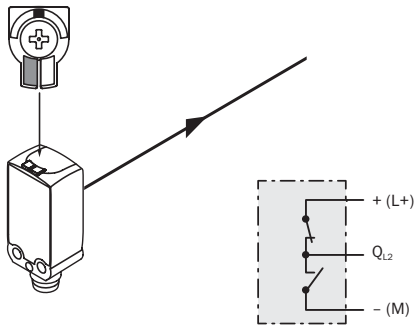	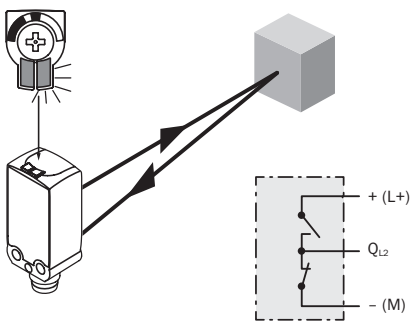

TRUTH TABLE PUSH-PULL: PNP/NPN - LIGHT SWITCHING Q_{L1}

	Light switching Q_{L1} (normally open (upper switch), normally closed (lower switch))	
	Object not present ➜ Output LOW	Object present ➜ Output HIGH
Light receive	✗	✓
Light receive indicator	✗	●
Load resistance to L+	⚠	✗
Load resistance to M	✗	⚠
	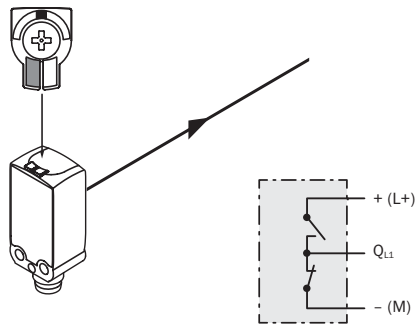	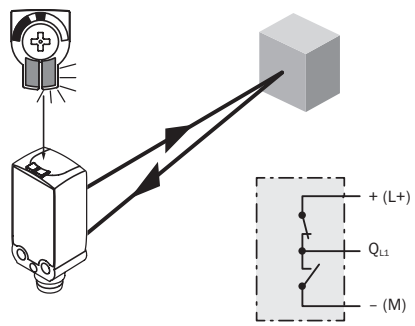

CHARACTERISTIC CURVE

Minimum distance in mm (y) between the set sensing range and white background (90 % remission)

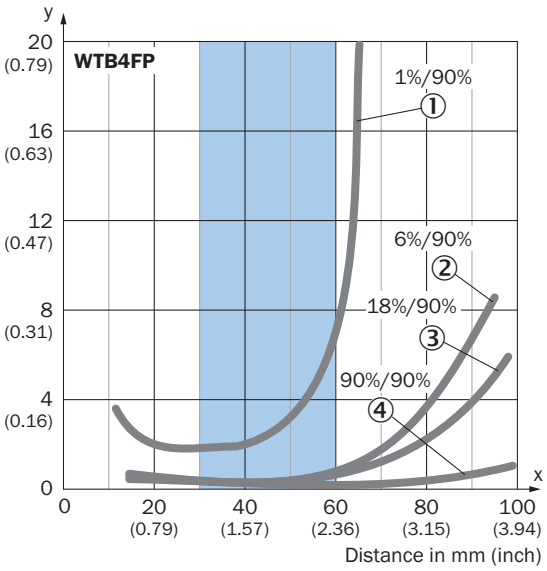

Recommended sensing range for the best performance

① ultra-black object, 1% remission factor
② Black object, 6% remission factor
③ Gray object, 18% remission factor
④ White object, 90% remission factor

Example:
Safe suppression of the background

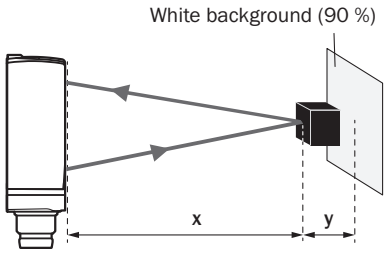

Black object (6 % remission)
Set sensing range x = 40 mm
Needed minimum distance to white background y = 0.5 mm

LIGHT SPOT SIZE

Dimensions in mm (inch)

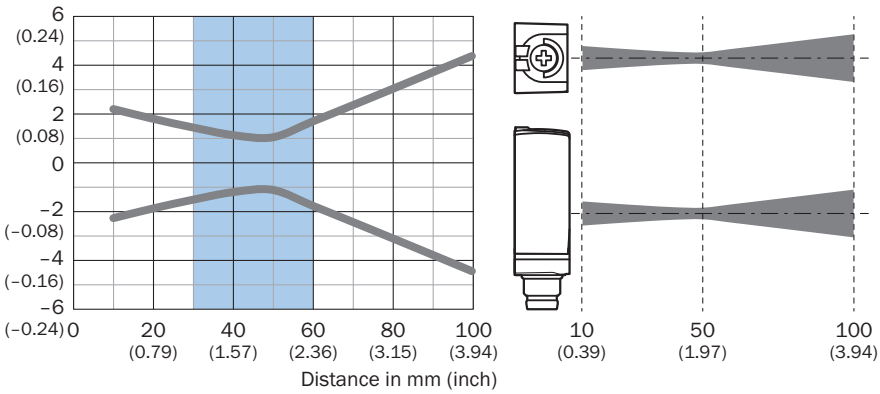

Recommended sensing range for the best performance

SENSING RANGE DIAGRAM

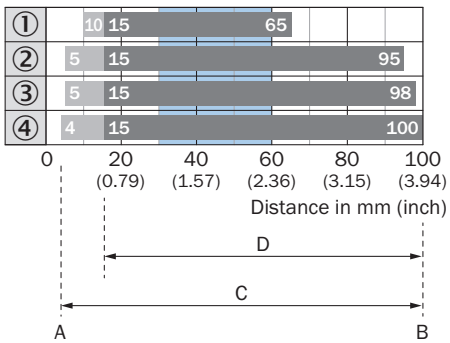

A = Sensing range min. in mm
B = Sensing range max. in mm
C = Viewing range
D = Adjustable switching threshold for background suppression

Recommended sensing range for the best performance

① ultra-black object, 1% remission factor
② Black object, 6% remission factor
③ Gray object, 18% remission factor
④ White object, 90% remission factor

DIMENSIONAL DRAWING

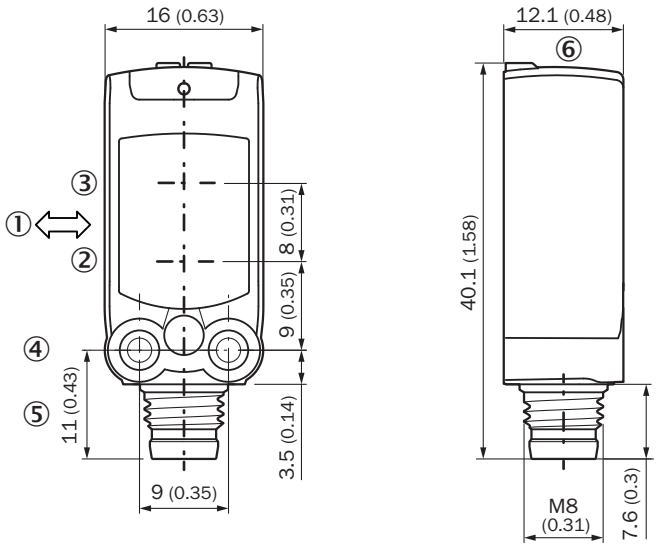

Dimensions in mm (inch)
① Standard direction of the material being detected
② Center of optical axis, sender
③ Center of optical axis, receiver
④ M3 mounting hole
⑤ Connection
⑥ display and adjustment elements

Further information as well as suitable accessories, example applications and downloads such as CAD dimensional models, operating instructions and software can be found at www.sick.com/1121418

SICK AG
WALDKIRCH
GERMANY
SICK.COM

SICK AT A GLANCE

SICK is a leading global technology company for intelligent sensors and integrated solutions in industrial automation. Our technologies set benchmarks, making your industrial processes more efficient, safer and more sustainable – both in logistics and manufacturing operations.

SICK combines sensor intelligence with industry expertise and certified consulting services. We provide the ideal foundation for scalable as well as tailor-made automation solutions and create added value along the entire value chain. Our close partnerships with our customers are more than just a promise: Together, we optimize productivity, improve quality, protect health and safety, and help build a sustainable future. All with empathy and trust.

Since 1946, we have been developing innovative technologies with passion and a pioneering spirit. With a global network in around 40 countries, SICK has a global presence and is always close by. The company's headquarters are located in Waldkirch near Freiburg, Germany. Our customers benefit from our understanding of both local and global requirements, which enables us to deliver tailor-made solutions

SICK
Sensor Intelligence