SICK.COM

DATA SHEET

RFU620-10505

RFU62x
RFID

SICK Sensor Intelligence

RFID

RFU620-10505

ORDERING INFORMATION

Type	part no.
RFU620-10505	1077860

Further device versions and accessories at www.sick.com/RFU62x

DETAILED TECHNICAL DATA

FEATURES

Version	Mid Range
Technology	RFID
Product category	RFID read/write device with integrated antenna
Radio approval	China (800 900 RFID 设备检验标准) Thailand
Frequency band	UHF (860 MHz ... 960 MHz)
Carrier frequency	920.625 MHz ... 924.375 MHz
Output power	0.2 W (ERP, 23 dBm)
RFID standard	EPCglobal UHF Class 1 Generation 2, ISO/IEC 18000-6 C, RAIN
Modulation	PR-ASK
Connection type	PoE
Aperture angle	100°
Heating	No
Reading range	≤ 2 m [1]
Antenna	Integrated
Transmitting power	Adjustable
Polarization	Circular
Axial ratio	Typ. 3 dB
Front-to-back ratio	> 5 dB
Further functions	Diagnosis, updatable firmware, freely programmable data output format, Heartbeat, triggering, SICK AppSpace functionalities can be enabled with the SD card accessory SDK6U-P00100 (for firmware ≥ 2.0.0)

[1] Depending on transponder used and ambient conditions.

MECHANICS/ELECTRONICS

Connection type	1, 1 x M12, 8-pin female connector, X-coded, USB, 5-pin micro-B socket
Supply voltage	48 V DC ... 57 V DC [1]

[1] According to PoE technology.

Power consumption	Typ. 8 W, standby 3 W
Housing material	Aluminum die cast Plastic (PPS)
Enclosure rating	IP67
Protection class	III
Weight	780 g
Dimensions (L x W x H)	137 mm x 131 mm x 56 mm
MTBF	> 100 years

[1] According to PoE technology.

INTERFACES

Ethernet	✓ , TCP/IP, PoE, OPC UA
Remark	Companion Spec V1.0 from firmware 2.20
Function	Data interface (read result output), Service interface, PoE
Data transmission rate	10/100 MBit/s
PROFINET	✓
Function	PROFINET Single Port, Data interface (read result output)
Data transmission rate	10/100 MBit/s
EtherNet/IP™	✓
Function	Data interface (read result output)
Data transmission rate	10/100 MBit/s
REST API	
Remark	From Firmware version 2.52
Function	Data interface (read result output), service interface
Data transmission rate	10/100 MBit/s
USB	✓
Remark	USB 2.0
Function	Service interface
Digital inputs	0
Digital outputs	0
Optical indicators	7 LEDs, multi-color (device status) 4 RGB LED (Process feedback)
Operator interfaces	Web server
Configuration software	SOPAS ET [1]
Programming interface	Application-specific programming using the SICK AppStudio development environment
Memory card	microSD memory card (parameter cloning, data storage)

[1] Another alternative is to generate your own configuration tools based on the SICK command language CoLa (e.g. in your own software or on PLC function blocks).

AMBIENT DATA

Electromagnetic compatibility (EMC)	EN 301489-3
Vibration resistance	EN 60068-2-64:2008-02
Shock resistance	EN 60068-2-27:2009-05
Ambient operating temperature	–25 °C ... +50 °C
Storage temperature	–40 °C ... +70 °C
Relative humidity	90 %, Non-condensing

CERTIFICATES

China RoHS	✓
Profinet certificate	✓
Radio Approval certificate China	✓

Radio Approval certificate Thailand	✓
RAIN RFID	✓

DIMENSIONAL DRAWING RFU62X

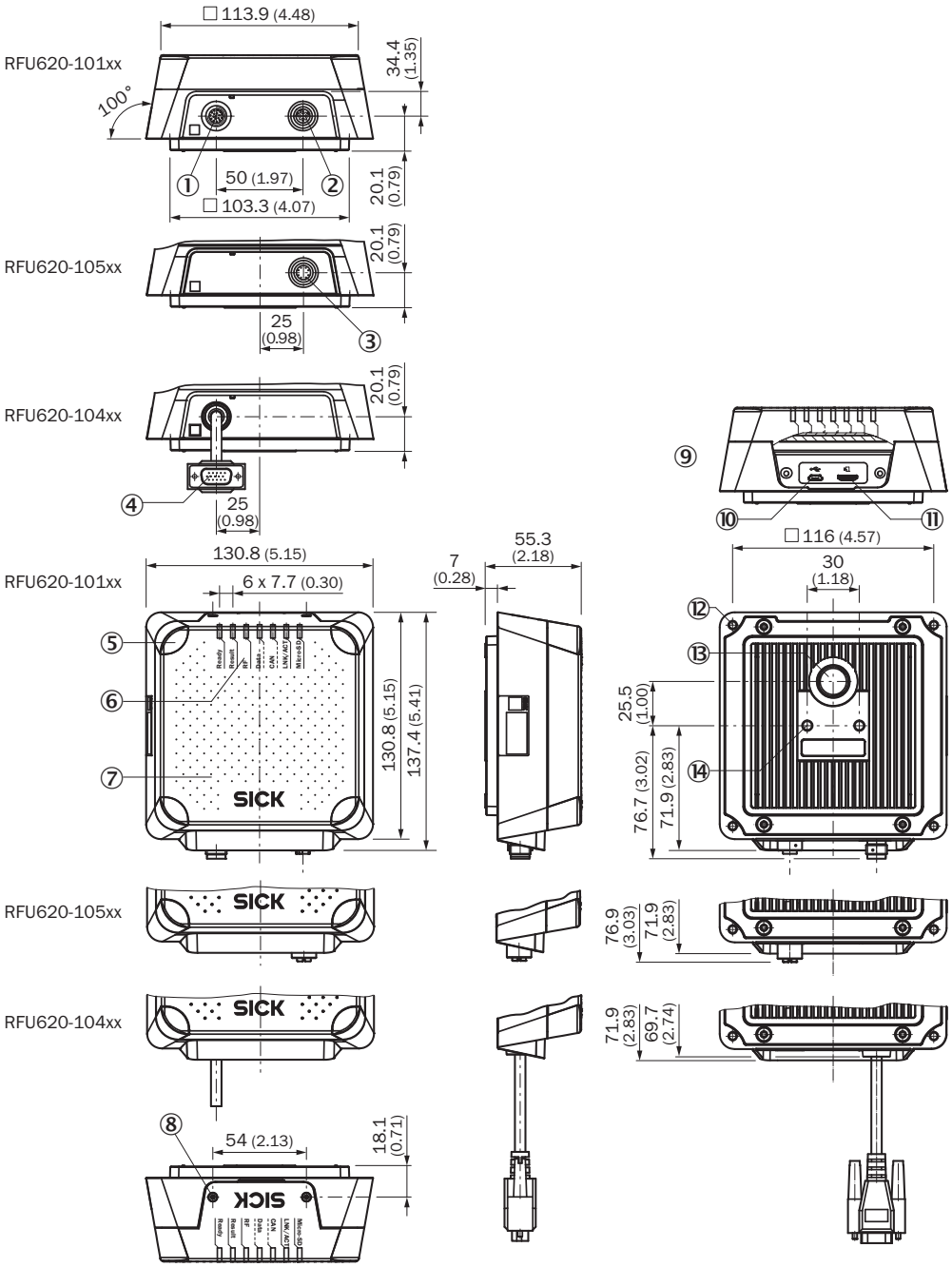

Dimensions in mm (inch)

① “Power/AUX/CAN/I/O” connection, 17-pin M12 male connector, A-coded
② “Ethernet” connection, 4-pin M12 female connector, D-coded
③ “Ethernet” connection, 8-pin M12 female connector, X-coded
④ “Power/HOST/AUX/CAN/I/O” connection, 15-pin D-Sub HD male connector, cable 0,9 m
⑤ 4 x LED, multi-colored (process feedback)
⑥ 7 x LED for status display
⑦ cover with integrated antenna
⑧ screw (Torx T8), captive (2 x), for side cover
⑨ side cover opened
⑩ USB socket, Micro B type
⑪ Slot for microSD memory card
⑫ blind hole thread M5, 9 mm deep (4 x), for alternatively mounting
⑬ pressure compensation valve (venitlation element)
⑭ M6 blind tapped holes, 7 mm deep (2 x), for mounting

RADIATION PATTERN

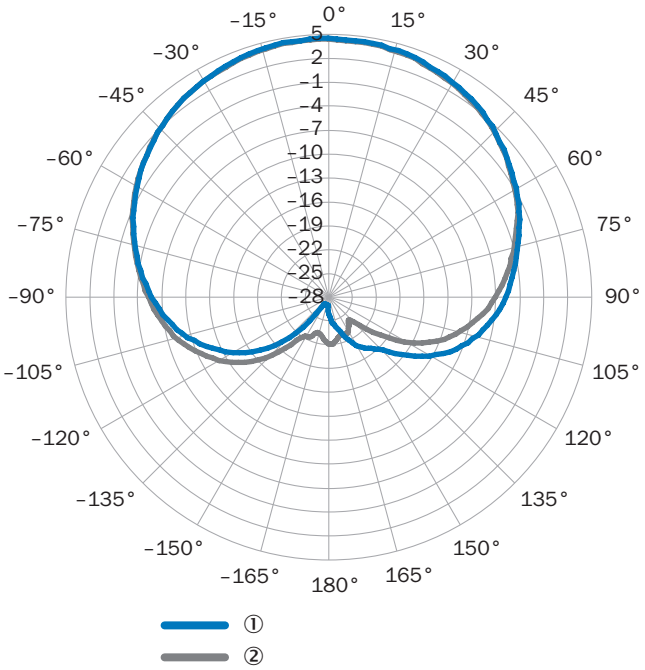

measured antenna gain in dBic at 868.5 MHz, RHCP (right-hand circularly polarized)
① Horizontal plane (azimuth)
② vertical plane (elevation)

CONNECTION DIAGRAM ETHERCAT®

Connecting cable (already present on device)
EtherCAT® cable, 2 m (Part no. 2106159)

CONNECTION DIAGRAM PROFINET IO/RT

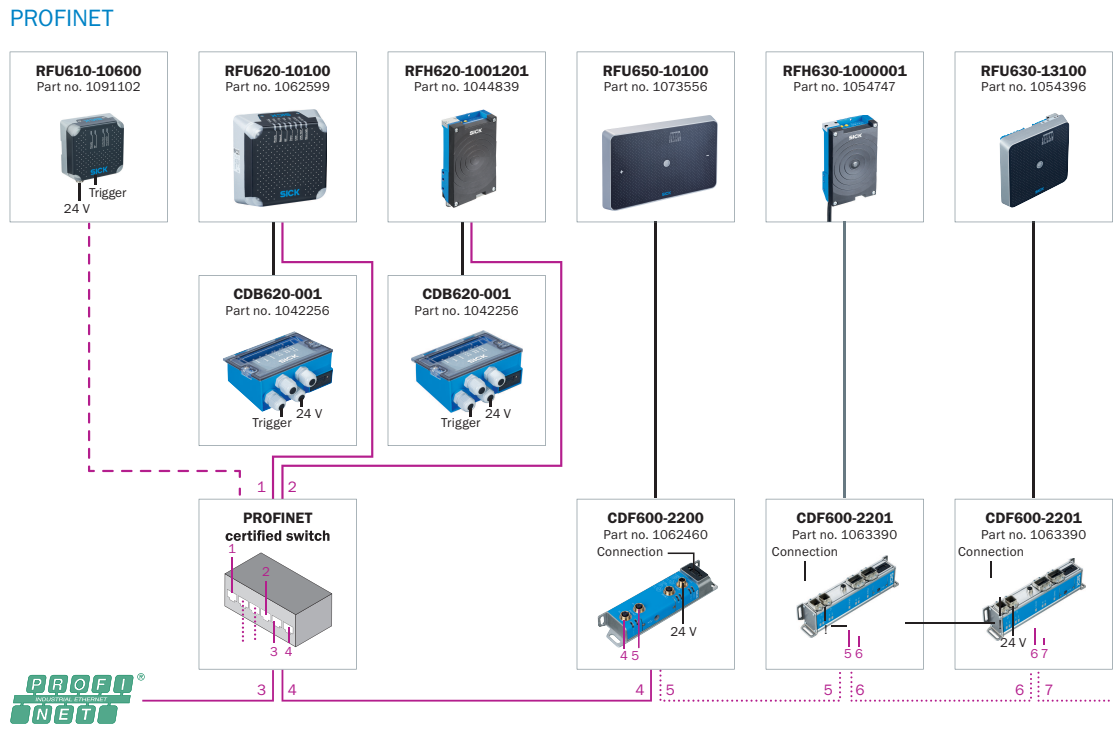

Connecting cable (already present on device)
Connection cable, 2 m (Part no. 6061702)
PROFINET cable, 2 m (Part no. 2106182)
PROFINET cable, 2 m (Part no. 2106258)
PROFINET cable, ready to assemble AIDA plug connectors

SYSTEM CONSTRUCTION

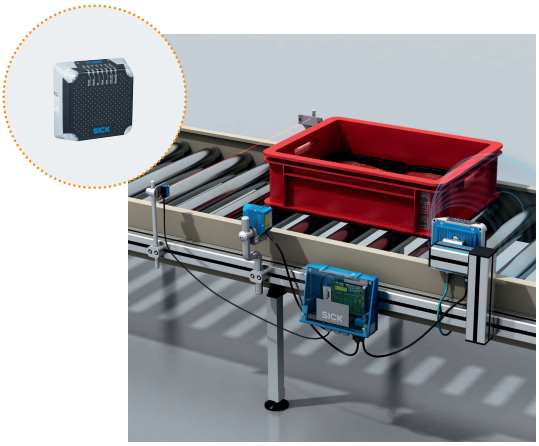

RFU62x

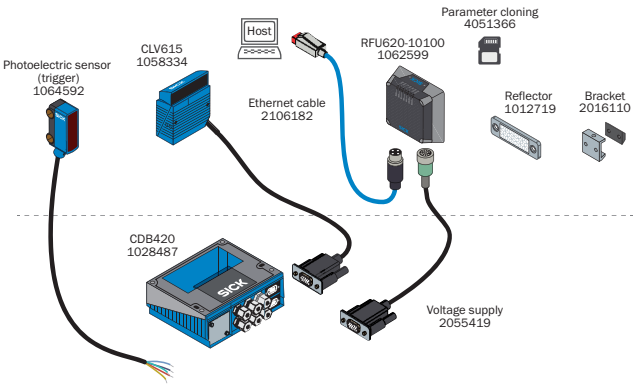

data combination of barcode and RFID

Further information as well as suitable accessories, example applications and downloads such as CAD dimensional models, operating instructions and software can be found at www.sick.com/1077860

SICK AG
WALDKIRCH
GERMANY
SICK.COM

SICK AT A GLANCE

SICK is a leading global technology company for intelligent sensors and integrated solutions in industrial automation. Our technologies set benchmarks, making your industrial processes more efficient, safer and more sustainable – both in logistics and manufacturing operations.

SICK combines sensor intelligence with industry expertise and certified consulting services. We provide the ideal foundation for scalable as well as tailor-made automation solutions and create added value along the entire value chain. Our close partnerships with our customers are more than just a promise: Together, we optimize productivity, improve quality, protect health and safety, and help build a sustainable future. All with empathy and trust.

Since 1946, we have been developing innovative technologies with passion and a pioneering spirit. With a global network in around 40 countries, SICK has a global presence and is always close by. The company's headquarters are located in Waldkirch near Freiburg, Germany. Our customers benefit from our understanding of both local and global requirements, which enables us to deliver tailor-made solutions

SICK
Sensor Intelligence