SICK.COM

DATA SHEET

CQF16-06ENSEW1

CQF
Capacitive proximity sensors

SICK Sensor Intelligence

Illustration may differ

CAPACITIVE PROXIMITY SENSORS

CQF16-06ENSEW1

ORDERING INFORMATION

Type	part no.
CQF16-06ENSEW1	6068626

Further device versions and accessories at www.sick.com/CQF

DETAILED TECHNICAL DATA

FEATURES

Housing	Rectangular
Dimensions (W x H x D)	16 mm x 34 mm x 8 mm
Sensing range S_n	0.5 mm ... 6 mm
Installation type	Flush Non-flush
Switching frequency	10 Hz
Connection type	Cable, 4-wire, 2 m [1]
Switching output	NPN
Switching output detail	NPN
Output function	NO
Electrical wiring	DC 4-wire
Adjustment Wire/pin	 Teach-in (full or empty)
Enclosure rating	IP67, IP68, IP69K
Special features	Detection of water-based liquids with conductivity up to 50 mS/cm; container diameter: min. 8 mm; container thickness: 0.5 mm ... 6 mm (plastic), 0.5 mm ... 4 mm (glass)
Items supplied	Mounting bracket (1x)

[1] Do not bend below 0 °C.

MECHANICS/ELECTRONICS

Supply voltage	10 V ... 30 V
Ripple	≤ 10 %
Voltage drop	≤ 1.5 V DC [1]
Current consumption	13 mA [2]

[1] At I_a max.

[2] Without load.

Time delay before availability	≤ 300 ms
Temperature drift (of S_r)	± 20 %
EMC	EN 60947-5-2
Continuous current I_a	≤ 100 mA
Cable material	PVC
Conductor size	0.14 mm²
Short-circuit protection	✓
Power-up pulse protection	✓
Shock and vibration resistance	30 g, 11 ms / 6 pos., 6 neg. per axis, 10 ... 150 Hz, 1.0 mm / 15 g
Ambient operating temperature	–25 °C ... +80 °C
Ambient temperature, storage	–40 °C ... +85 °C
Housing material	Plastic, PBT
Tightening torque, max.	0.2 Nm
Protection class	III
UL File No.	NRKH.E191603

[1] At I_a max.

[2] Without load.

SAFETY-RELATED PARAMETERS

$MTTF_D$	1,972 years
DC_{avg}	0 %
T_M (mission time)	20 years

INSTALLATION NOTE

Remark	Associated graphic see "Installation"
A	≥ 10 mm (at factory setting)
B	16 mm
F	≥ 25 mm (at factory setting)

CERTIFICATES

EU declaration of conformity	✓
UK declaration of conformity	✓
Moroccan declaration of conformity	✓
China RoHS	✓
China Compulsory Product Certification (CCC) exempt	✓
cULus certificate	✓

INSTALLATION NOTE

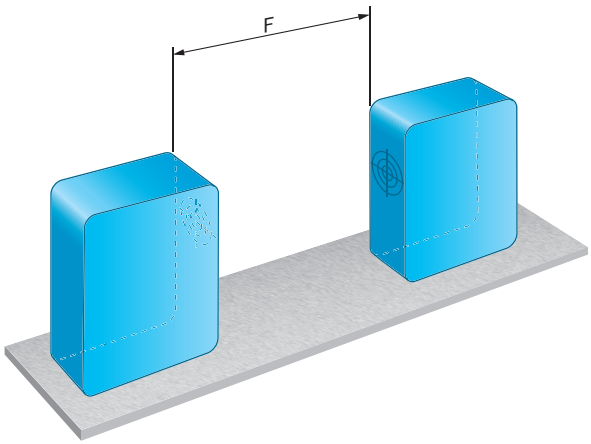

INSTALLATION NOTE

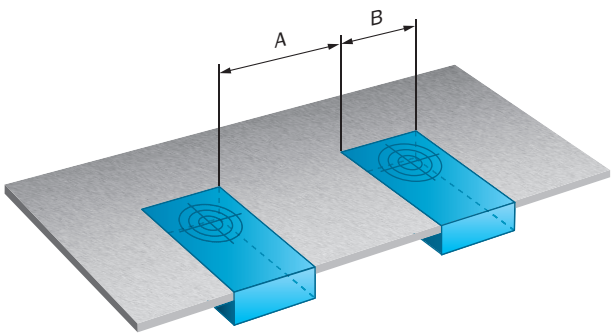

CONNECTION DIAGRAM CD-023

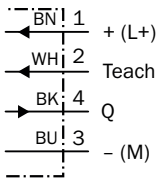

DIMENSIONAL DRAWING SENSOR WITH BRACKET (INCLUDED IN THE SCOPE OF DELIVERY)

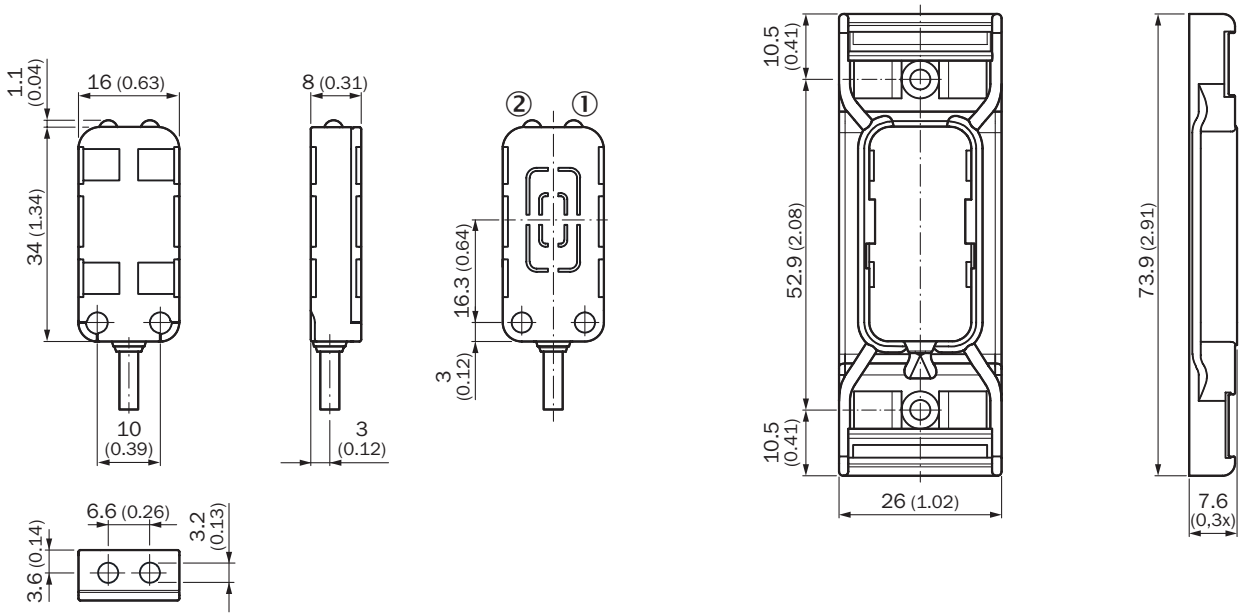

Dimensions in mm (inch)
① Yellow LED indicator: Switching output
② LED indicator green: Supply voltage active

Further information as well as suitable accessories, example applications and downloads such as CAD dimensional models, operating instructions and software can be found at www.sick.com/6068626

SICK AG
WALDKIRCH
GERMANY
SICK.COM

SICK AT A GLANCE

SICK is a leading global technology company for intelligent sensors and integrated solutions in industrial automation. Our technologies set benchmarks, making your industrial processes more efficient, safer and more sustainable – both in logistics and manufacturing operations.

SICK combines sensor intelligence with industry expertise and certified consulting services. We provide the ideal foundation for scalable as well as tailor-made automation solutions and create added value along the entire value chain. Our close partnerships with our customers are more than just a promise: Together, we optimize productivity, improve quality, protect health and safety, and help build a sustainable future. All with empathy and trust.

Since 1946, we have been developing innovative technologies with passion and a pioneering spirit. With a global network in around 40 countries, SICK has a global presence and is always close by. The company's headquarters are located in Waldkirch near Freiburg, Germany. Our customers benefit from our understanding of both local and global requirements, which enables us to deliver tailor-made solutions

SICK
Sensor Intelligence