SICK.COM

DATA SHEET

DFS60S-BBOC01024

DFS60S Pro
Safety encoders

SICK Sensor Intelligence

Illustration may differ

SAFETY ENCODERS

DFS60S-BBOC01024

ORDERING INFORMATION

Type	part no.
DFS60S-BBOC01024	1088523

Further device versions and accessories at www.sick.com/DFS60S_Pro

DETAILED TECHNICAL DATA

SAFETY-RELATED PARAMETERS

Safety integrity level	SIL 2 (IEC 61508), SILCL2 (IEC 62061) [1]
Performance level	PL d (EN ISO 13849) [1]
Category	3 (EN ISO 13849)
PFH (mean probability of a dangerous failure per hour)	1.7×10^{-8} [2]
T_M (mission time)	20 years (EN ISO 13849)
Safety-related measuring step	0.09°, Quadrature analysis
Safety-related accuracy	± 0.09°

[1] For more detailed information on the exact configuration of your machine/unit, please consult your relevant SICK branch office.

[2] The stated values apply to a diagnostic coverage of 99%, which must be achieved by the external drive system, and an operating temperature of 95 °C.

PERFORMANCE

Sine/cosine periods per revolution	1,024
Measuring step	0.3 ″, For interpolation of the sine/cosine signals with e.g. 12 bit [1]
Integral non-linearity	Typ. ± 45 ″ (without mechanical tension of the stator coupling)
Differential non-linearity	± 7 ″

[1] Not safety-related.

INTERFACES

Communication interface	Incremental
Communication Interface detail	Sin/Cos [1]
Number of signal channels	6-channel

[1] 1.0 V_{ss} (differential).

[2] Valid signals can be read once this time has elapsed.

Initialization time	50 ms [2]
Output frequency	≤ 153.6 kHz
Power consumption	≤ 0.7 W (without load)
Load resistance	≥ 120 Ω

[1] 1.0 V_{ss} (differential).

[2] Valid signals can be read once this time has elapsed.

ELECTRONICS

Connection type	Male connector, M12, 8-pin, radial
Supply voltage	4.5 ... 32 V
Reference signal, number	1
Reference signal, position	90°, electronically, gated with Sinus and Cosinus
Reverse polarity protection	✓
Protection class	III (according to DIN EN 61140)
Short-circuit protection of the outputs	✓ [1]

[1] Short-circuit to another channel or GND permitted for max. 30 s. In the case of U_s ≤ 12 V additional short-circuit to U_s permitted for max. 30 s.

MECHANICS

Mechanical design	Blind hollow shaft
Shaft diameter	8 mm With feather key
Weight	Approx. 0.25 kg [1]
Shaft material	Stainless steel
Flange material	Die-cast zinc
Housing material	Aluminum die cast
Start up torque	≤ 0.8 Ncm (+20 °C)
Operating torque	≤ 0.6 Ncm (+20 °C)
Permissible movement static	± 0.3 mm (radial) ± 0.5 mm (axial)
Permissible movement dynamic	± 0.05 mm (radial) ± 0.1 mm (axial)
Operating speed	≤ 6,000 min^{-1} [2]
Moment of inertia of the rotor	56 gcm^2
Bearing lifetime	3.6×10^9 revolutions [3]
Angular acceleration	≤ 500,000 rad/s^2

[1] Based on encoder with male connector.

[2] Allow for self-heating of approx. 3.0 K per 1,000 rpm regarding the permissible operating temperature.

[3] On maximum operating speed and temperature.

AMBIENT DATA

EMC	According to EN 61000-6-2, EN 61000-6-3 and IEC 61326-3-1
Enclosure rating	IP65 (IEC 60529) [1]
Permissible relative humidity	90 % (Condensation not permitted)
Operating temperature range	–30 °C ... +95 °C [2]

[1] With plug and mating plug fitted minimum IP65.

[2] Allow for self-heating of approx. 3.0 K per 1,000 rpm regarding the permissible operating temperature.

[3] Checked to operation with vector length monitoring.

Storage temperature range	–30 °C ... +85 °C, without package
Resistance to shocks	100 g, 6 ms (EN 60068-2-27) [3]
Resistance to vibration	30 g, 10 Hz ... 1,000 Hz (EN 60068-2-6)

[1] With plug and mating plug fitted minimum IP65.

[2] Allow for self-heating of approx. 3.0 K per 1,000 rpm regarding the permissible operating temperature.

[3] Checked to operation with vector length monitoring.

CERTIFICATES

EU declaration of conformity	✓
UK declaration of conformity	✓
ACMA declaration of conformity	✓
Moroccan declaration of conformity	✓
China RoHS	✓
cULus certificate	✓
EC-Type-Examination approval	✓
Information according to Art. 3 of Data Act (Regulation EU 2023/2854)	✓

DIMENSIONAL DRAWING BLIND HOLLOW SHAFT, RADIAL MALE CONNECTOR M12 AND M23

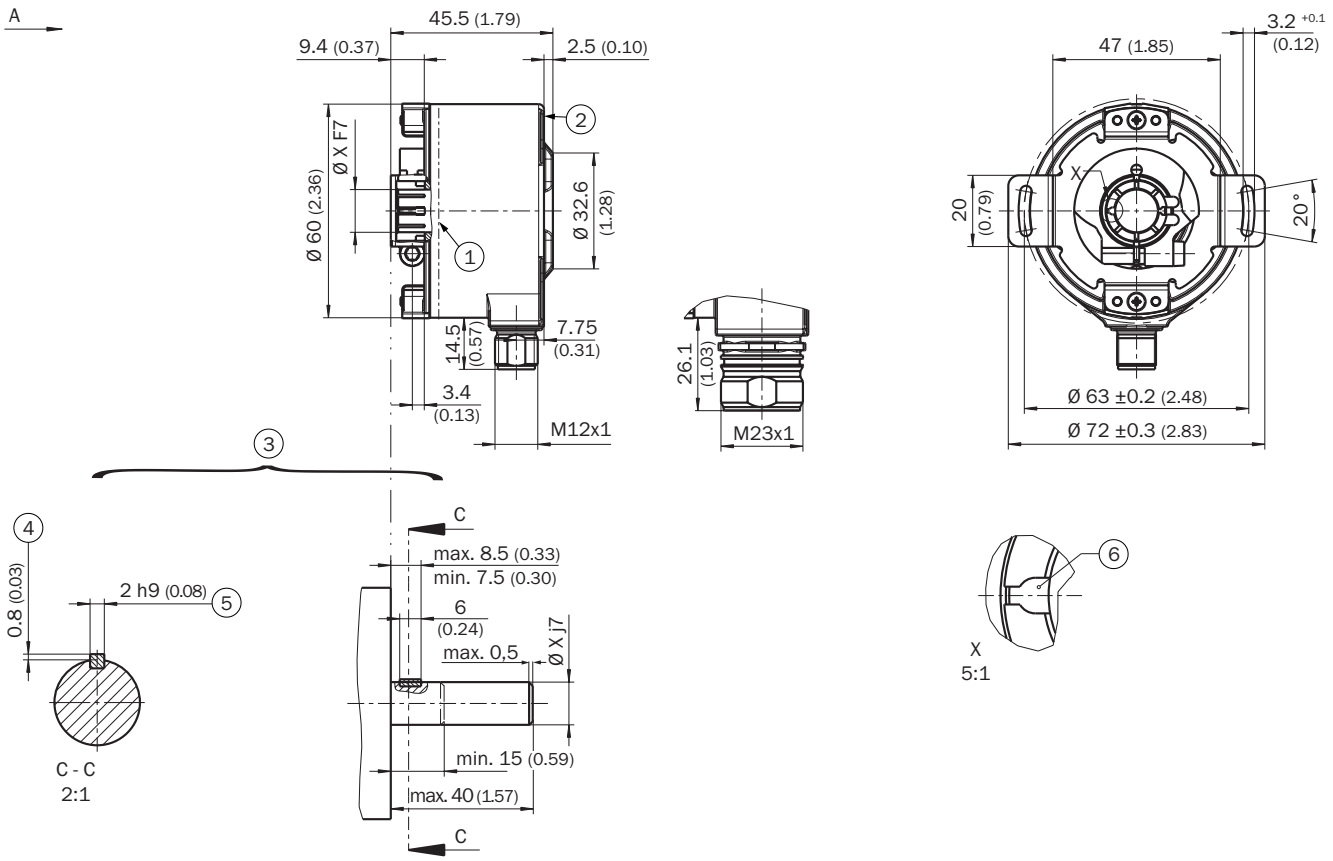

Dimensions in mm (inch)
General tolerances according to DIN ISO 2768-mk
① operating temperature measuring point (freely selectable, around the housing surface area in each case, approx. 3 mm away from flange)
② measuring point vibration (respectively at the housing face. approx. 3 mm away from the cover edge)
③ Attachment specifications
④ max. 0.4 at Ø 5/8"
⑤ feather key DIN 6885-A 2x2x6
⑥ feather key groove

PIN ASSIGNMENT

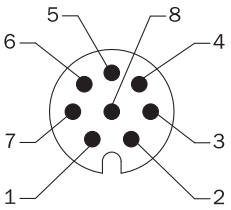

view of M12 male device connector on encoder

PINMale connector M12, 8-pin	PINMale connector M23, 12-pin	Wire colors (cable connection)	Signal	Explanation
1	6	Brown	- COS	Signal wire
2	5	White	+ COS	Signal wire
3	1	Black	- SIN	Signal wire
4	8	Pink	+ SIN	Signal wire
5	4	Yellow	Z¯	Signal (do not use for safety operating mode)

PINMale connector M12, 8-pin	PINMale connector M23, 12-pin	Wire colors (cable connection)	Signal	Explanation
6	3	Violet	Z	Signal (do not use for safety operating mode)
7	10	Blue	GND	Ground connection
8	12	Red	U_S	Supply voltage (volt-free to housing)
-	9	-	N.C.	Not assigned
-	2	-	N.C.	Not assigned
-	11	-	N.C.	Not assigned
-	7	-	N.C.	Not assigned
Screen	Screen	Screen	Screen	Screen connected to encoder housingScreen connected to housing on encoder side. Connected to ground on control side.

DIAGRAMS SIGNAL SIN/COS AFTER DIFFERENTIAL GENERATION

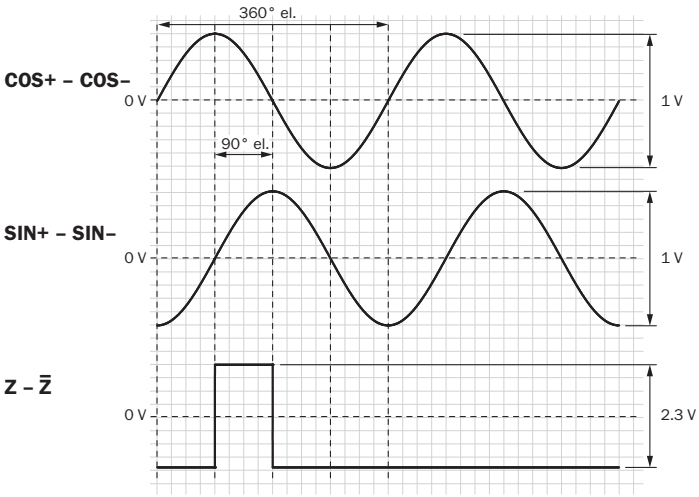

For clockwise shaft rotation, looking in direction “A” (see dimensional drawing)

Supply voltage	Output
4,5 V ... 5,5 V	Sin/Cos 1.0 V_{PP}

DIAGRAMS SIGNAL SIN/COS BEFORE DIFFERENTIAL GENERATION

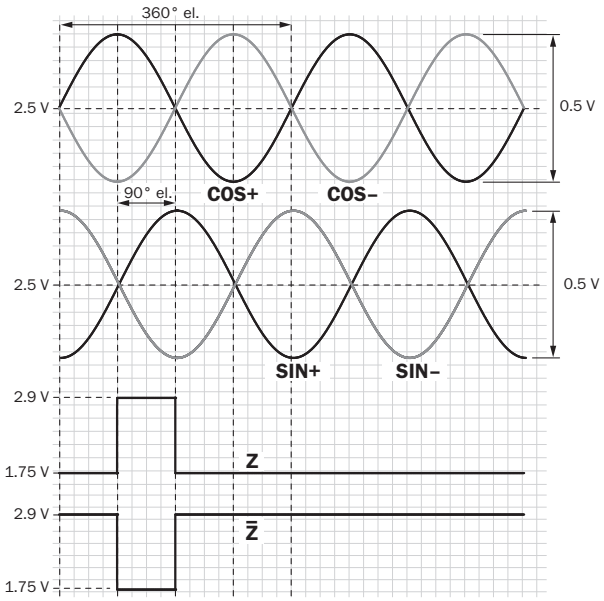

For clockwise shaft rotation, looking in direction “A” (see dimensional drawing)

Signal	Interface signals	Signal before differential generationAt load 120 Ω	Signal offset
+ SIN- SIN+ COS- COS	Analog, differential	0,5 V_{ss} ± 20 %	2,5 V ± 10 %
ZZ_	Digital differential	Low: 1,75 V ± 15 %, High: 2,90 V ± 15 %	–

Further information as well as suitable accessories, example applications and downloads such as CAD dimensional models, operating instructions and software can be found at www.sick.com/1088523

SICK AG
WALDKIRCH
GERMANY
SICK.COM

SICK AT A GLANCE

SICK is a leading global technology company for intelligent sensors and integrated solutions in industrial automation. Our technologies set benchmarks, making your industrial processes more efficient, safer and more sustainable – both in logistics and manufacturing operations.

SICK combines sensor intelligence with industry expertise and certified consulting services. We provide the ideal foundation for scalable as well as tailor-made automation solutions and create added value along the entire value chain. Our close partnerships with our customers are more than just a promise: Together, we optimize productivity, improve quality, protect health and safety, and help build a sustainable future. All with empathy and trust.

Since 1946, we have been developing innovative technologies with passion and a pioneering spirit. With a global network in around 40 countries, SICK has a global presence and is always close by. The company's headquarters are located in Waldkirch near Freiburg, Germany. Our customers benefit from our understanding of both local and global requirements, which enables us to deliver tailor-made solutions

SICK
Sensor Intelligence