SICK.COM

DATA SHEET

WL250-2N1131

W250
Photoelectric sensors

SICK Sensor Intelligence

Illustration may differ

PHOTOELECTRIC SENSORS

WL250-2N1131

ORDERING INFORMATION

Type	part no.
WL250-2N1131	6044695

Further device versions and accessories at www.sick.com/W250

DETAILED TECHNICAL DATA

FEATURES

Functional principle	Photoelectric retro-reflective sensor
Functional principle detail	With minimum distance to reflector (dual lens system)
Dimensions (W x H x D)	20 mm x 65 mm x 43.9 mm
Housing design (light emission)	Rectangular
Sensing range max.	0.01 m ... 15 m [1] 0.01 m ... 12 m [2]
Sensing range	0.01 m ... 13 m [1] 0.01 m ... 11 m [2]
Focus	Approx. 2°
Type of light	Visible red light
Light source	LED [3]
Light spot size (distance)	Ø 260 mm (8 m)
Angle of dispersion	Approx. 2°
Adjustment	Potentiometer, 2 turns [4]

[1] Reflector PL80A.

[2] Reflector P250.

[3] Average service life: 100,000 h at T_U = +25 °C.

[4] With position indicator.

MECHANICS/ELECTRONICS

Supply voltage U_B	10 V DC ... 30 V DC [1]
Ripple	< 5 V_{pp} [2]
Current consumption	20 mA [3]
Switching output	NPN
Switching mode	Light/dark switching
Switching mode selector	Selectable via L/D control cable
Output current $I_{max.}$	≤ 100 mA
Response time	≤ 0.5 ms [4]
Switching frequency	1,000 Hz [5]
Connection type	Cable, 4-wire, 2 m [6]
Cable material	Plastic, PVC
Conductor cross section	0.18 mm²
Cable diameter	Ø 3.8 mm
Circuit protection	A [7] B [8] C [9] D [10]
Protection class	III
Weight	150 g
Polarizing filter	✓
Housing material	Plastic, ABS
Optics material	Plastic, PMMA
Enclosure rating	IP67
Items supplied	Reflector P250, BEF-W250 mounting bracket
Electromagnetic compatibility (EMC)	EN 60947-5-2 [11]
Ambient operating temperature	–25 °C ... +55 °C
Ambient temperature, storage	–40 °C ... +70 °C
UL File No.	NRKH2.E300503 & NRKH8.E300503

[1] Limit values when operated in short-circuit protected network: max. 8 A.

[2] May not fall below or exceed U_v tolerances.

[3] Without load.

[4] Signal transit time with resistive load.

[5] With light/dark ratio 1:1.

[6] Do not bend below 0 °C.

[7] A = V_s connections reverse-polarity protected.

[8] B = inputs and output reverse-polarity protected.

[9] C = interference suppression.

[10] D = outputs overcurrent and short-circuit protected.

[11] The AC/DC devices comply with the Radio Safety Requirements for the industrial sector (Radio Safety Class A). They may cause radio interference if used in a residential area.

SAFETY-RELATED PARAMETERS

$MTTF_D$	1,751 years
DC_{avg}	0 %

CERTIFICATES

EU declaration of conformity	✓
UK declaration of conformity	✓
ACMA declaration of conformity	✓
Moroccan declaration of conformity	✓
China RoHS	✓
China Compulsory Product Certification (CCC) exempt	✓
cRUus certificate	✓
Photobiological safety (DIN EN 62471) certificate	✓

ADJUSTMENTS WL250-2

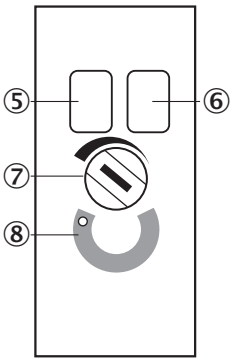

⑤ LED indicator green: Stability indicator
⑥ LED indicator yellow: Status of received light beam
⑦ Sensitivity control: potentiometer
⑧ Position indicator for sensitivity setting (270°)

CONNECTION DIAGRAM CD-089

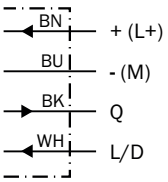

CHARACTERISTIC CURVE

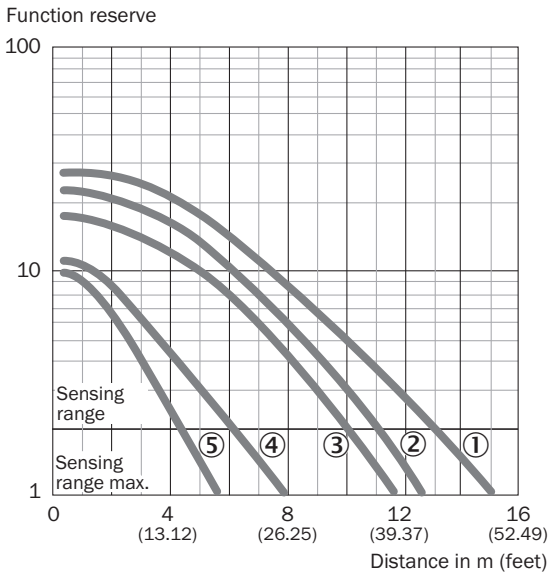

① Reflector PL80A, C110A
② Reflector P250
③ Reflector PL50A, PL40A, PL30A, PL31A
④ Reflector PL20A
⑤ Diamond Grade reflective tape, 100 mm x 100 mm

SENSING RANGE DIAGRAM

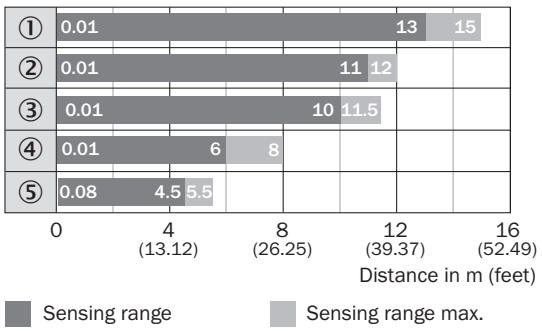

① Reflector PL80A, C110A
② Reflector P250
③ Reflector PL50A, PL40A, PL30A, PL31A
④ Reflector PL20A
⑤ Diamond Grade reflective tape, 100 mm x 100 mm

DIMENSIONAL DRAWING WL250-2, DC, CABLE

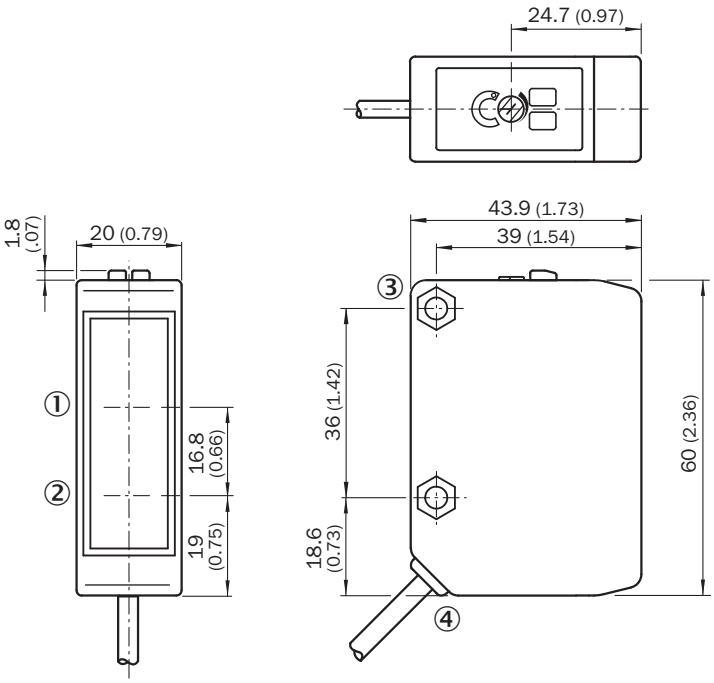

Dimensions in mm (inch)
① Reception axis
② Axis of sender
③ mounting hole ø 4.2 mm, for M4 hexagon nuts on both sides
④ Connection cable

Further information as well as suitable accessories, example applications and downloads such as CAD dimensional models, operating instructions and software can be found at www.sick.com/6044695

SICK AG
WALDKIRCH
GERMANY
SICK.COM

SICK AT A GLANCE

SICK is a leading global technology company for intelligent sensors and integrated solutions in industrial automation. Our technologies set benchmarks, making your industrial processes more efficient, safer and more sustainable – both in logistics and manufacturing operations.

SICK combines sensor intelligence with industry expertise and certified consulting services. We provide the ideal foundation for scalable as well as tailor-made automation solutions and create added value along the entire value chain. Our close partnerships with our customers are more than just a promise: Together, we optimize productivity, improve quality, protect health and safety, and help build a sustainable future. All with empathy and trust.

Since 1946, we have been developing innovative technologies with passion and a pioneering spirit. With a global network in around 40 countries, SICK has a global presence and is always close by. The company's headquarters are located in Waldkirch near Freiburg, Germany. Our customers benefit from our understanding of both local and global requirements, which enables us to deliver tailor-made solutions

SICK
Sensor Intelligence