SICK.COM

DATA SHEET

i110-SA223

i110S
Electro-mechanical safety switches

Sensor Intelligence

actuator not supplied with delivery

ELECTRO-MECHANICAL SAFETY SWITCHES

i110-SA223

ORDERING INFORMATION

Type	part no.
i110-SA223	6025074

Further device versions and accessories at www.sick.com/i110S

DETAILED TECHNICAL DATA

FEATURES

Sensor principle	Electro-mechanical
Positive action N/C contacts	2
N/O contacts	2
Retaining force	≤ 12 N
Actuation frequency	≤ 7,200 /h
Actuation directions	5
Approach speed	≤ 10 m/min

SAFETY-RELATED PARAMETERS

B_{10d} parameter	2×10^6 switching cycles (with small load)
Type	Type 2 (EN ISO 14119)
Actuator coding level	Low coding level (EN ISO 14119)
Safe state in the event of a fault	The switch has no internal fault detection and is unable to assume a safe state in the event of a fault. Fault detection is performed by the connected safety-related logic unit.

FUNCTIONS

Safe series connection	None, only individual wiring (with diagnostics)

INTERFACES

Connection type	Cable gland, 1 x M20
Conductor cross section	≤ 1.5 mm²

ELECTRONICS

Switching principle	Slow action switching element

Usage category	AC-15/DC-13 (IEC 60947-5-1)
Rated operating current (voltage)	3 A (240 V AC) 2 A (24 V DC)
Rated insulation voltage U_i	240 V
Rated impulse withstand voltage U_{imp}	2,500 V
Short-circuit protection	T10/10A
Switching voltage	≥ 5 V DC
Switching current (switching voltage)	5 mA (5 V DC)

MECHANICS

Weight	0.54 kg
Material Housing	 Zinc diecast
Surface treatment	Varnished
Mechanical life	1×10^6 switching cycles

AMBIENT DATA

Enclosure rating	IP67 (IEC 60529)
Ambient operating temperature	–20 °C ... +80 °C
Storage temperature	–20 °C ... +80 °C

CERTIFICATES

EU declaration of conformity	✓
UK declaration of conformity	✓
China RoHS	✓
cULus certificate	✓
TÜV approval	✓
TÜV approval annex	✓

DIMENSIONAL DRAWING

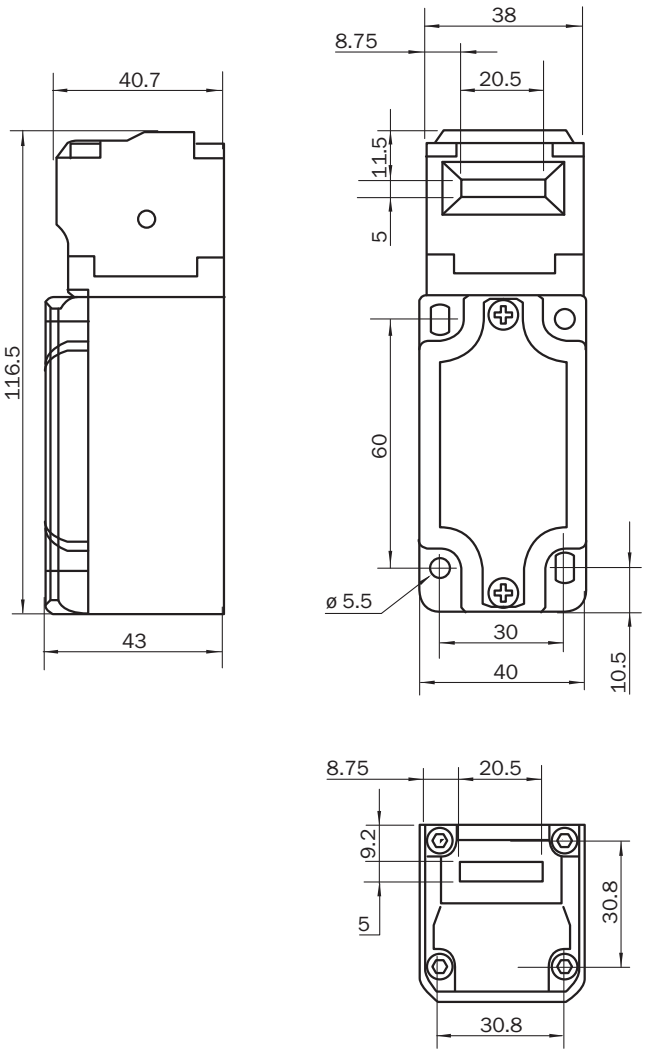

Dimensions in mm (inch)

ACTUATOR TRAVEL DIAGRAM CONTACT ACTION OVER THE ENTIRE ACTUATOR WITHDRAWL DISTANCE (FULL INSERTION = 0 MM)

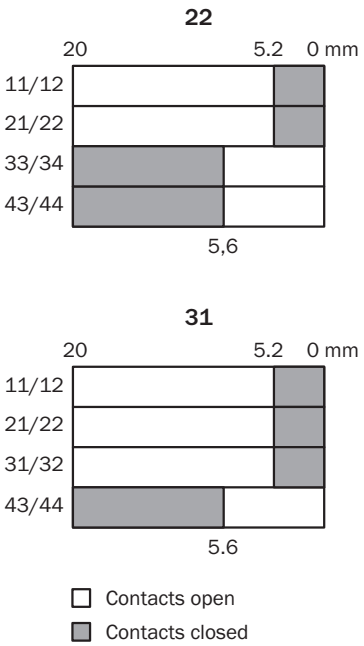

SWITCHING ELEMENTS

	Actuator inserted	Actuator removed
	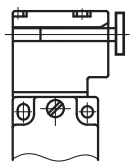	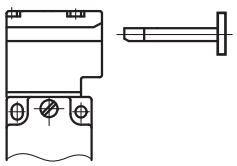
Switching element 22	43 44 33 34 21 22 11 12	43 44 33 34 21 22 11 12
Switching element 31	43 44 31 32 21 22 11 12	43 44 31 32 21 22 11 12

Switching element 22:
2 positive action N/C contacts + 2 N/O contact

Switching element 31:
3 positive action N/C contacts + 1 N/O contact

Further information as well as suitable accessories, example applications and downloads such as CAD dimensional models, operating instructions and software can be found at www.sick.com/6025074

SICK AG
WALDKIRCH
GERMANY
SICK.COM

SICK AT A GLANCE

SICK is a leading global technology company for intelligent sensors and integrated solutions in industrial automation. Our technologies set benchmarks, making your industrial processes more efficient, safer and more sustainable – both in logistics and manufacturing operations.

SICK combines sensor intelligence with industry expertise and certified consulting services. We provide the ideal foundation for scalable as well as tailor-made automation solutions and create added value along the entire value chain. Our close partnerships with our customers are more than just a promise: Together, we optimize productivity, improve quality, protect health and safety, and help build a sustainable future. All with empathy and trust.

Since 1946, we have been developing innovative technologies with passion and a pioneering spirit. With a global network in around 40 countries, SICK has a global presence and is always close by. The company's headquarters are located in Waldkirch near Freiburg, Germany. Our customers benefit from our understanding of both local and global requirements, which enables us to deliver tailor-made solutions

SICK
Sensor Intelligence