SICK.COM



DATA SHEET

LXRC-1XXXJXXABMAAX

LXRC-1
Level sensors

SICK Sensor Intelligence



Illustration may differ

LEVEL SENSORS

LXRC-1XXXJXXABMAAX

ORDERING INFORMATION

Type	part no.
LXRC-1XXXJXXABMAAX	6085689

Further device versions and accessories at www.sick.com/LXRC-1

DETAILED TECHNICAL DATA

FEATURES

Medium	Fluids, bulk solids
Measurement	Continuous, switch
Probe type	Thread with integrated horn antenna made from PTFE
Frequency band	W-band (within 75 ... 85 GHz)
Measuring range	0 m ... 15 m
Angle of dispersion	12° [1]
Process pressure	–1 bar ... 16 bar
Process temperature	–40 °C ... +130 °C
360° status indicator	✓

[1] Outside the specified aperture angle, the level of the radar signal energy is lowered by 50% (-3 dB).

PERFORMANCE

Accuracy of sensor element	± 2 mm [1] [2]
Reproducibility	≤ 1 mm
Resolution	< 1 mm
Response time	1,000 ms

[1] At reference conditions.

[2] If subjected to EMC interference, the measurement error can be larger.

ELECTRONICS

Communication interface	IO-Link

[1] All connections are polarity protected. All outputs are overload and short-circuit protected.

[2] UB = 35 V DC, output signal = 20 mA.

Supply voltage	12 V DC ... 35 V DC [1]
Initialization time	≤ 5 s
Protection class	III
Connection type	M12 round connector x 1, 4-pin
Output signal	2 x PNP/NPN/PNP/NPN + 4 mA ... 20 mA
Power consumption	≤ 3.5 W [2]
Inductive load	≤ 0.5 H
Capacitive load	≤ 100 nF
Enclosure rating	IP66 IP67 IP69
Lower signal level	3.8 mA ... 4 mA
Upper signal level	20 mA ... 20.5 mA

[1] All connections are polarity protected. All outputs are overload and short-circuit protected.

[2] UB = 35 V DC, output signal = 20 mA.

MECHANICS

Wetted parts	Stainless steel 1.4404 / 316L PTFE FKM
Process connection	G 1, PN16, DIN3852-A
Housing material	Stainless steel 1.4404 / 316L, PBT/PC
Male connector material	Plastic

AMBIENT DATA

Ambient operating temperature	–40 °C ... +70 °C
Ambient temperature, storage	–40 °C ... +80 °C

CERTIFICATES

EU declaration of conformity	✓
China RoHS	✓
China Compulsory Product Certification (CCC) exempt	✓
cULus certificate	✓
FCC certificate	✓
IO-Link certificate	✓
Radio Approval certificate Australia	✓
Radio Approval certificate Canada	✓
Radio Approval certificate New Zealand	✓
Information according to Art. 3 of Data Act (Regulation EU 2023/2854)	✓

DIMENSIONAL DRAWING

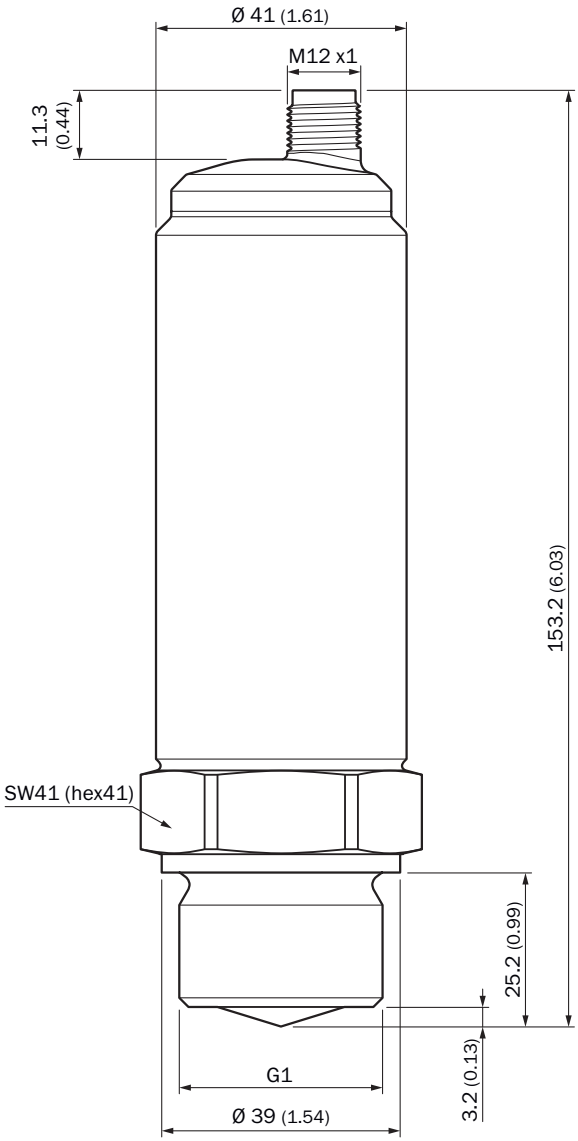

Dimensions in mm (inch)

FUNCTIONAL PRINCIPLE

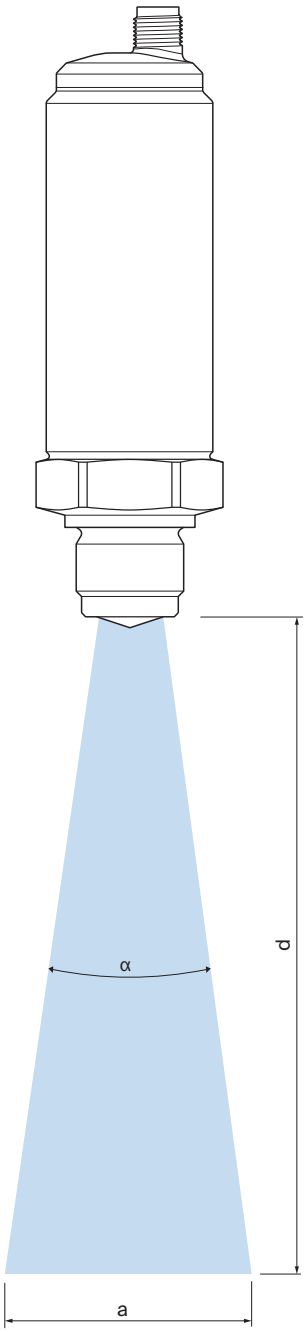

Aperture angle (α) 12°

Distance to antenna (d)	Diameter signal cone (a)
0.5 m	0.09 m
1.0 m	0.20 m
1.5 m	0.30 m
2.0 m	0.41 m
2.5 m	0.52 m
3.0 m	0.62 m
3.5 m	0.73 m
4.0 m	0.83 m
4.5 m	0.94 m
5.0 m	1.04 m
5.5 m	1.15 m
6.0 m	1.25 m
6.5 m	1.36 m
7.0 m	1.46 m
7.5 m	1.57 m
8.0 m	1.67 m
8.5 m	1.78 m
9.0 m	1.88 m
9.5 m	1.99 m
10.0 m	2.09 m
10.5 m	2.20 m
11.0 m	2.30 m
11.5 m	2.41 m
12.0 m	2.51 m
12.5 m	2.62 m
13.0 m	2.72 m
13.5 m	2.83 m
14.0 m	2.93 m
14.5 m	3.04 m
15.0 m	3.14 m

Further information as well as suitable accessories, example applications and downloads such as CAD dimensional models, operating instructions and software can be found at www.sick.com/6085689

SICK AG
WALDKIRCH
GERMANY
SICK.COM

SICK AT A GLANCE

SICK is a leading global technology company for intelligent sensors and integrated solutions in industrial automation. Our technologies set benchmarks, making your industrial processes more efficient, safer and more sustainable – both in logistics and manufacturing operations.

SICK combines sensor intelligence with industry expertise and certified consulting services. We provide the ideal foundation for scalable as well as tailor-made automation solutions and create added value along the entire value chain. Our close partnerships with our customers are more than just a promise: Together, we optimize productivity, improve quality, protect health and safety, and help build a sustainable future. All with empathy and trust.

Since 1946, we have been developing innovative technologies with passion and a pioneering spirit. With a global network in around 40 countries, SICK has a global presence and is always close by. The company's headquarters are located in Waldkirch near Freiburg, Germany. Our customers benefit from our understanding of both local and global requirements, which enables us to deliver tailor-made solutions

SICK

Sensor Intelligence