SICK.COM

DATA SHEET

WL280-2H1531

W280
Photoelectric sensors

SICK Sensor Intelligence

Illustration may differ

PHOTOELECTRIC SENSORS

WL280-2H1531

ORDERING INFORMATION

Type	part no.
WL280-2H1531	6044739

Further device versions and accessories at www.sick.com/W280

DETAILED TECHNICAL DATA

FEATURES

Functional principle	Photoelectric retro-reflective sensor
Functional principle detail	With minimum distance to reflector (dual lens system)
Dimensions (W x H x D)	23.5 mm x 74.5 mm x 63 mm
Housing design (light emission)	Rectangular
Sensing range max.	0.01 m ... 15 m [1] 0.01 m ... 12 m [2]
Sensing range	0.01 m ... 13 m [1] 0.01 m ... 11 m [2]
Type of light	Visible red light
Light source	LED [3]
Light spot size (distance)	Ø 260 mm (8 m)
Adjustment	Potentiometer

[1] Reflector PL80A.

[2] Reflector P250.

[3] Average service life: 100,000 h at T_u = +25 °C.

MECHANICS/ELECTRONICS

Supply voltage U_B	24 V DC ... 240 V DC [1] 24 V AC ... 240 V AC [1]
Power consumption	≤ 5 VA
Switching output	Relay, electrically isolated [2]
Output function	Change-over contacts
Switching mode	Light switching [2]
Switching current (switching voltage)	3 A (240 V AC) 3 A (30 V DC)
Response time	≤ 15 ms
Switching frequency	33 Hz [3]
Connection type	Cable, 5-wire, 2 m [4]
Cable material	Plastic, PVC
Conductor cross section	0.76 mm²
Circuit protection	A [5] C [6]
Protection class	II [7]
Overvoltage category	2
Weight	150 g
Polarizing filter	✓
Interference emission	EN 61000-6-3 (only –2Hxxxx) [8]
Housing material	Plastic, ABS
Optics material	Plastic, PMMA
Enclosure rating	IP66 IP67
Items supplied	Mounting bracket BEF-W280, Reflector P250
Usage category	AC-15, DC-13 According to EN 60947-1
Electromagnetic compatibility (EMC)	EN 60947-5-2 EN 61000-6-3 (only –2Hxxxx) [9] [9]
Ambient operating temperature	–25 °C ... +55 °C
Ambient temperature, storage	–40 °C ... +70 °C

[1] +- 10%.

[2] Provide suitable spark suppression for inductive or capacitive loads.

[3] With light/dark ratio 1:1.

[4] Do not bend below 0 °C.

[5] A = V_s connections reverse-polarity protected.

[6] C = interference suppression.

[7] Rated voltage: 250 V AC/DC.

[8] In the case of a DC supply (relating to EN 61000-6-3) the length of cable between the supply source and the sensor must be < 30 m.

[9] The AC/DC devices (-2Rxxxx only) comply with the Radio Safety Requirements for the industrial sector (Radio Safety Class A). They may cause radio interference if used in a residential area.

SAFETY-RELATED PARAMETERS

$MTTF_D$	1,537 years
DC_{avg}	0 %

CERTIFICATES

EU declaration of conformity	✓
UK declaration of conformity	✓
ACMA declaration of conformity	✓
Moroccan declaration of conformity	✓
China RoHS	✓
Photobiological safety (DIN EN 62471) certificate	✓

ADJUSTMENTS WL280-2H/-2R

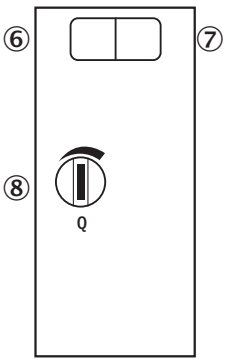

⑥ LED indicator green: Stability indicator
⑦ LED indicator yellow: Status of received light beam
⑧ Sensitivity control: potentiometer

CONNECTION DIAGRAM CD-229

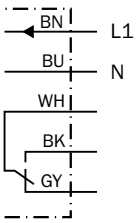

CHARACTERISTIC CURVE

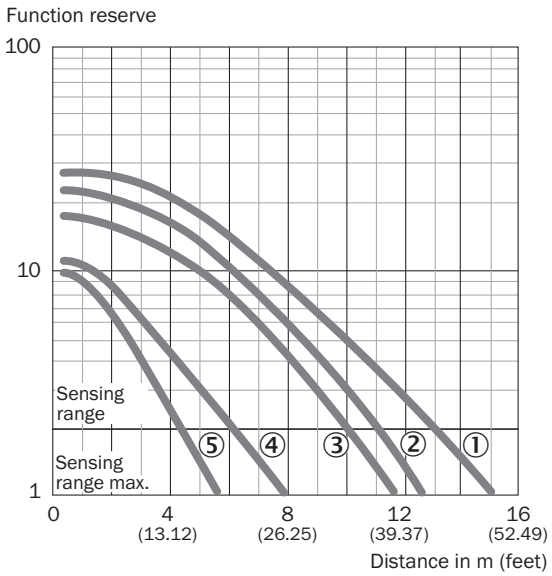

① Reflector PL80A, C110A
② Reflector P250
③ Reflector PL50A, PL40A, PL30A, PL31A
④ Reflector PL20A
⑤ Diamond Grade reflective tape, 100 mm x 100 mm

SENSING RANGE DIAGRAM

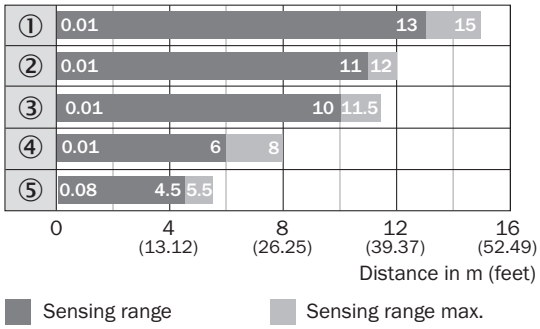

① Reflector PL80A, C110A
② Reflector P250
③ Reflector PL50A, PL40A, PL30A, PL31A
④ Reflector PL20A
⑤ Diamond Grade reflective tape, 100 mm x 100 mm

DIMENSIONAL DRAWING WTE280-2, WL280-2, AC/DC

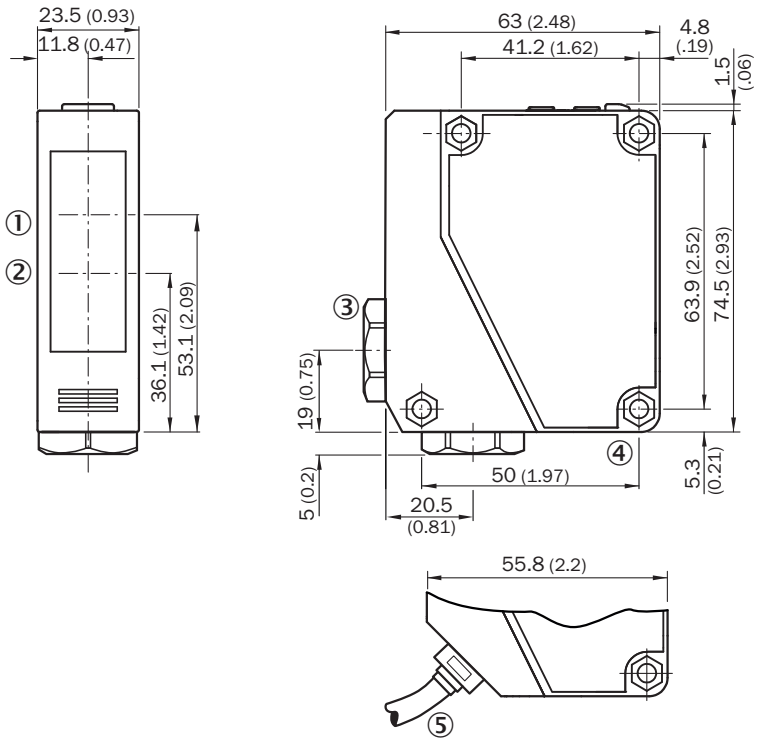

Dimensions in mm (inch)
① Center of optical axis, receiver
② Center of optical axis, sender
③ Cable entry gland 3/8" for cable diameter 6 to 8 mm
④ Mounting hole, Ø 4.3 mm
⑤ Cable, 2 m, 5-wire, Ø 6.3 mm

Further information as well as suitable accessories, example applications and downloads such as CAD dimensional models, operating instructions and software can be found at www.sick.com/6044739

SICK AG
WALDKIRCH
GERMANY
SICK.COM

SICK AT A GLANCE

SICK is a leading global technology company for intelligent sensors and integrated solutions in industrial automation. Our technologies set benchmarks, making your industrial processes more efficient, safer and more sustainable – both in logistics and manufacturing operations.

SICK combines sensor intelligence with industry expertise and certified consulting services. We provide the ideal foundation for scalable as well as tailor-made automation solutions and create added value along the entire value chain. Our close partnerships with our customers are more than just a promise: Together, we optimize productivity, improve quality, protect health and safety, and help build a sustainable future. All with empathy and trust.

Since 1946, we have been developing innovative technologies with passion and a pioneering spirit. With a global network in around 40 countries, SICK has a global presence and is always close by. The company's headquarters are located in Waldkirch near Freiburg, Germany. Our customers benefit from our understanding of both local and global requirements, which enables us to deliver tailor-made solutions

SICK
Sensor Intelligence