SICK.COM

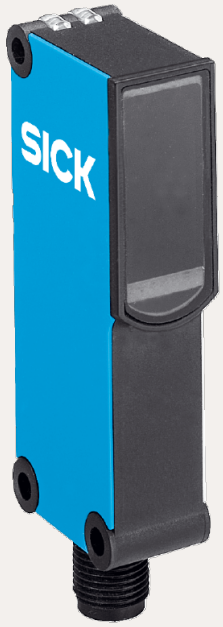

DATA SHEET

WL14-2P430S07

W14
Photoelectric sensors

SICK Sensor Intelligence

Illustration may differ

PHOTOELECTRIC SENSORS

WL14-2P430S07

ORDERING INFORMATION

Type	part no.
WL14-2P430S07	1045089

Further device versions and accessories at www.sick.com/W14

DETAILED TECHNICAL DATA

FEATURES

Functional principle	Photoelectric retro-reflective sensor
Functional principle detail	Dual lens
Dimensions (W x H x D)	17.6 mm x 75.5 mm x 33.5 mm
Housing design (light emission)	Rectangular
Sensing range max.	0.15 m ... 17 m [1]
Sensing range	0.15 m ... 12 m [1]
Focus	Approx. 0.9°
Type of light	Visible red light
Light source	PinPoint LED [2]
Light spot size (distance)	Ø 30 mm (2 m)
Angle of dispersion	Approx. 0.9°
Wave length	637 nm
Adjustment	None

[1] Reflector PL80A.

[2] Average service life: 100,000 h at T_u = +25 °C.

MECHANICS/ELECTRONICS

Supply voltage	10 V DC ... 30 V DC [1]
Ripple	< 5 V_{pp} [2]
Current consumption	35 mA [3]
Switching output	PNP
Output function	Complementary
Switching mode	Light/dark switching
Output current $I_{max.}$	≤ 100 mA
Response time	≤ 2.5 ms [4]
Switching frequency	200 Hz [5]
Connection type	Male connector M12, 4-pin
Circuit protection	A [6] C [7] D [8]
Weight	40 g
Polarisation filter	✓
Special device	✓
Housing material	Plastic, ABS
Optics material	Plastic, PMMA
Enclosure rating	IP67
Ambient operating temperature	–25 °C ... +60 °C
Ambient temperature, storage	–40 °C ... +70 °C
UL File No.	NRKH.E181493 & NRKH7.E181493

[1] Limit values when operated in short-circuit protected network: max. 8 A.

[2] May not exceed or fall below U_v tolerances.

[3] Without load.

[4] Signal transit time with resistive load.

[5] With light/dark ratio 1:1.

[6] A = V_s connections reverse-polarity protected.

[7] C = interference suppression.

[8] D = outputs overcurrent and short-circuit protected.

SAFETY-RELATED PARAMETERS

$MTTF_D$	2,449 years
DC_{avg}	0 %

CONNECTION TYPE

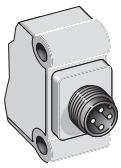

CONNECTION DIAGRAM CD-083

CHARACTERISTIC CURVE WL14-2, 17 M

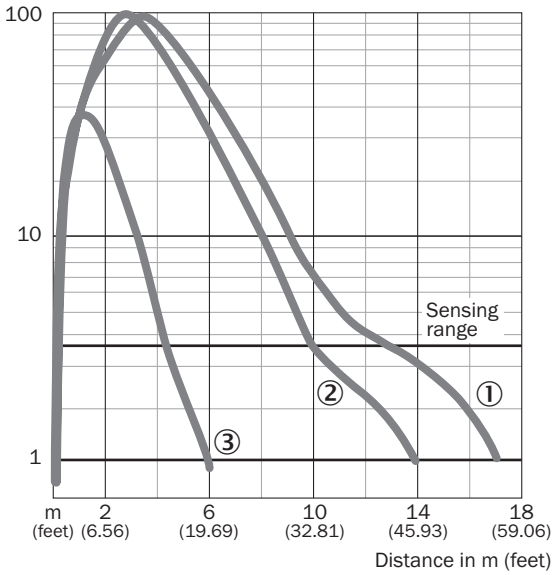

① Reflector PL80A
② Reflector PL40A
③ Reflective tape REF-IRF-56

SENSING RANGE DIAGRAM WL14-2, 17 M

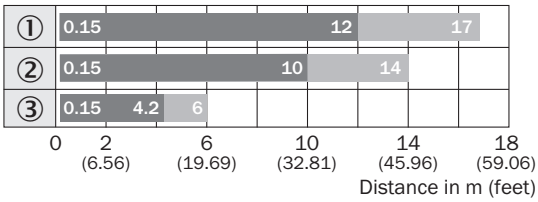

Sensing range Sensing range max.

① Reflector PL80A
② Reflector PL40A
③ Reflective tape REF-IRF-56

DIMENSIONAL DRAWING WL14-2

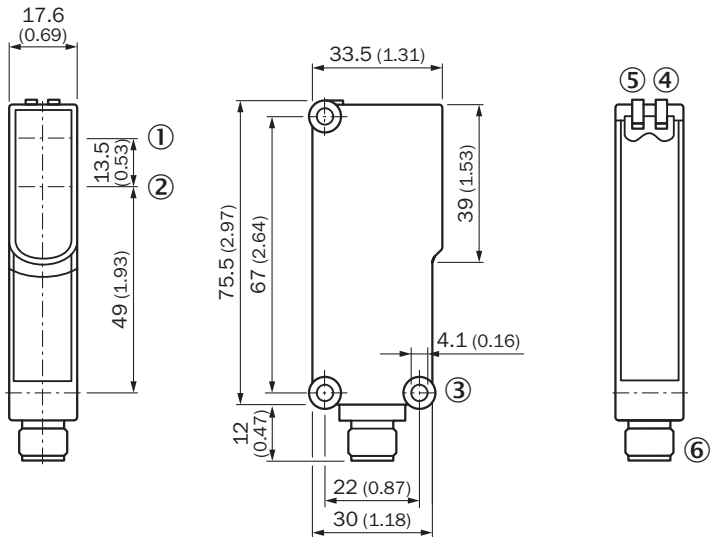

Dimensions in mm (inch)
① Center of optical axis, sender
② Center of optical axis, receiver
③ Mounting hole ø 4.1 mm
④ LED indicator yellow: Status of received light beam
⑤ LED indicator green: Supply voltage active
⑥ M12 male connector, 4-pin or 2 m cable

Further information as well as suitable accessories, example applications and downloads such as CAD dimensional models, operating instructions and software can be found at www.sick.com/1045089

SICK AG
WALDKIRCH
GERMANY
SICK.COM

SICK AT A GLANCE

SICK is a leading global technology company for intelligent sensors and integrated solutions in industrial automation. Our technologies set benchmarks, making your industrial processes more efficient, safer and more sustainable – both in logistics and manufacturing operations.

SICK combines sensor intelligence with industry expertise and certified consulting services. We provide the ideal foundation for scalable as well as tailor-made automation solutions and create added value along the entire value chain. Our close partnerships with our customers are more than just a promise: Together, we optimize productivity, improve quality, protect health and safety, and help build a sustainable future. All with empathy and trust.

Since 1946, we have been developing innovative technologies with passion and a pioneering spirit. With a global network in around 40 countries, SICK has a global presence and is always close by. The company's headquarters are located in Waldkirch near Freiburg, Germany. Our customers benefit from our understanding of both local and global requirements, which enables us to deliver tailor-made solutions

SICK
Sensor Intelligence