SICK.COM

DATA SHEET

IM08-03BPS-ZW1

IML
Inductive proximity sensors

SICK Sensor Intelligence

Illustration may differ

INDUCTIVE PROXIMITY SENSORS

IM08-03BPS-ZW1

ORDERING INFORMATION

Type	part no.
IM08-03BPS-ZW1	6027505

Further device versions and accessories at www.sick.com/IML

DETAILED TECHNICAL DATA

FEATURES

Housing	Metric
Housing	Standard design
Thread size	M8 x 1
Diameter	Ø 8 mm
Sensing range S_n	3 mm
Safe sensing range S_a	2.43 mm
Installation type	Quasi-flush [1]
Switching frequency	1,000 Hz
Connection type	Cable, 3-wire, 2 m
Switching output	PNP
Switching output detail	PNP
Output function	NO
Electrical wiring	DC 3-wire
Enclosure rating	IP67 [2]
Special features	Triple sensing range
Items supplied	Mounting nut, brass, chromium-plated (2x) Washer, brass, chromium-plated, with locking teeth (2x)

[1] When installed in conductive materials, the sensors must protrude by distance A (A = 1 mm).

[2] According to EN 60529.

MECHANICS/ELECTRONICS

Supply voltage	10 V DC ... 30 V DC
Ripple	≤ 20 % [1]
Voltage drop	≤ 2 V [2]
Time delay before availability	≤ 50 ms
Hysteresis	1 % ... 15 %
Reproducibility	≤ 5 % [3] [4]
Temperature drift (of S_r)	± 10 %
EMC	According to EN 60947-5-2
Continuous current I_a	≤ 200 mA
Cable material	PVC
Conductor size	0.14 mm²
Cable diameter	Ø 3.5 mm
Short-circuit protection	✓
Power-up pulse protection	✓
Shock and vibration resistance	30 g, 11 ms / 10 ... 55 Hz, 1 mm
Installation aid	✓ [5]
Ambient operating temperature	–25 °C ... +70 °C
Housing material	Brass, chromium-plated
Sensing face material	Plastic, PTB
Housing length	45 mm
Thread length	45 mm
Tightening torque, max.	4 Nm

[1] Of V_s.

[2] At I_a max.

[3] Of Sr.

[4] UB = 20 V DC ... 30 V DC, TA = 23 °C ± 5 °C.

[5] LED lights continuously (0 ≤ s ≤ 0.8 Sr); LED flashing (0.8 Sr < s ≤ Sr).

SAFETY-RELATED PARAMETERS

$MTTF_D$	171 years
DC_{avg}	0%
T_M (mission time)	20 years

REDUCTION FACTORS

Note	The values are reference values which may vary
Stainless steel (V4A, 316L)	Approx. 0.72
Aluminum (Al)	Approx. 0.33
Copper (Cu)	Approx. 0.27
Brass (Br)	Approx. 0.41

INSTALLATION NOTE

Remark	Associated graphic see "Installation"
A	2 mm
B	8 mm
C	8 mm

D	9 mm
E	1 mm
F	30 mm

CERTIFICATES

EU declaration of conformity	✓
ACMA declaration of conformity	✓
China RoHS	✓

INSTALLATION NOTE NON-FLUSH INSTALLATION

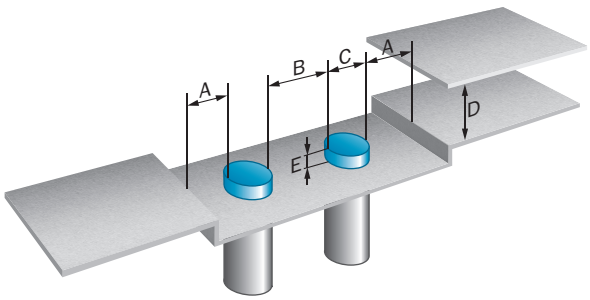

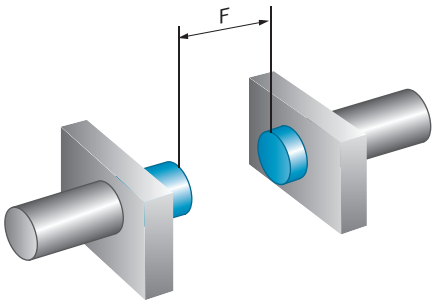

CONNECTION TYPE

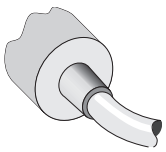

CONNECTION DIAGRAM CD-001

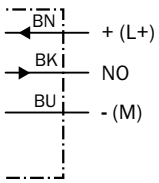

DIMENSIONAL DRAWING IM08 TRIPLEX, CABLE, QUASI-FLUSH

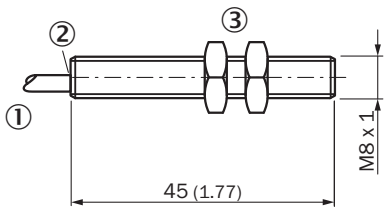

Dimensions in mm (inch)
① Connection
② Display LED
③ Fastening nuts (2x); width across 13, metal

Further information as well as suitable accessories, example applications and downloads such as CAD dimensional models, operating instructions and software can be found at www.sick.com/6027505

SICK AG
WALDKIRCH
GERMANY
SICK.COM

SICK AT A GLANCE

SICK is a leading global technology company for intelligent sensors and integrated solutions in industrial automation. Our technologies set benchmarks, making your industrial processes more efficient, safer and more sustainable – both in logistics and manufacturing operations.

SICK combines sensor intelligence with industry expertise and certified consulting services. We provide the ideal foundation for scalable as well as tailor-made automation solutions and create added value along the entire value chain. Our close partnerships with our customers are more than just a promise: Together, we optimize productivity, improve quality, protect health and safety, and help build a sustainable future. All with empathy and trust.

Since 1946, we have been developing innovative technologies with passion and a pioneering spirit. With a global network in around 40 countries, SICK has a global presence and is always close by. The company's headquarters are located in Waldkirch near Freiburg, Germany. Our customers benefit from our understanding of both local and global requirements, which enables us to deliver tailor-made solutions

SICK
Sensor Intelligence