SICK.COM

DATA SHEET

WS/WE260-F470

W260
Photoelectric sensors

SICK Sensor Intelligence

Illustration may differ

PHOTOELECTRIC SENSORS

WS/WE260-F470

ORDERING INFORMATION

Type	part no.
WS/WE260-F470	6020974

Further device versions and accessories at www.sick.com/W260

DETAILED TECHNICAL DATA

FEATURES

Functional principle	Through-beam photoelectric sensor
Dimensions (W x H x D)	25 mm x 78 mm x 63 mm
Housing design (light emission)	Rectangular
Sensing range max.	0 m ... 35 m
Sensing range	0 m ... 30 m
Focus	Approx. 1.4°
Type of light	Visible red light
Light source	LED [1]
Light spot size (distance)	Ø 700 mm (30 m)
Angle of dispersion	Approx. 1.4°
Adjustment	Potentiometer, 270°

[1] Average service life: 100,000 h at T_u = +25 °C.

MECHANICS/ELECTRONICS

Supply voltage	10 V DC ... 30 V DC [1]
Ripple	< 5 V_{pp} [2]
Power consumption, sender	20 mA [3]
Power consumption, receiver	35 mA [3]
Switching output	PNP
Switching mode	Light/dark switching
Switching mode selector	Selectable via light/dark selector
Output current $I_{max.}$	≤ 100 mA
Response time	≤ 0.5 ms [4]
Switching frequency	1,000 Hz [5]
Angle of reception	Approx. 20°
Connection type	Male connector M12, 4-pin
Circuit protection	A [6] B [7] C [8] D [9]
Protection class	II [10]
Weight	120 g
Housing material	Plastic, ABS
Optics material	Plastic, PC
Enclosure rating	IP67
Items supplied	Mounting bracket BEF-W260 (2x)
Test input sender off	TE to 0 V
Ambient operating temperature	–25 °C ... +55 °C
Ambient temperature, storage	–40 °C ... +70 °C
UL File No.	NRNT2.E128350 & NRNT8.E128350

[1] Limit values when operated in short-circuit protected network: max. 8 A.

[2] May not exceed or fall below U_v tolerances.

[3] Without load.

[4] Signal transit time with resistive load.

[5] With light/dark ratio 1:1.

[6] A = V_s connections reverse-polarity protected.

[7] B = inputs and output reverse-polarity protected.

[8] C = interference suppression.

[9] D = outputs overcurrent and short-circuit protected.

[10] Reference voltage: 50 V DC.

SAFETY-RELATED PARAMETERS

$MTTF_D$	603 years
DC_{avg}	0 %

CONNECTION TYPE

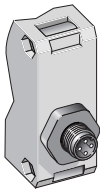

CONNECTION DIAGRAM CD-182

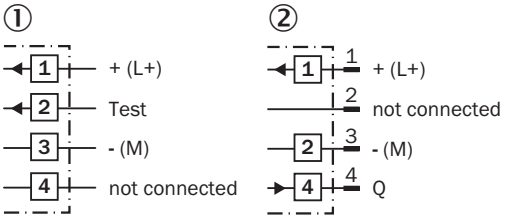

① sender
② receiver

CHARACTERISTIC CURVE

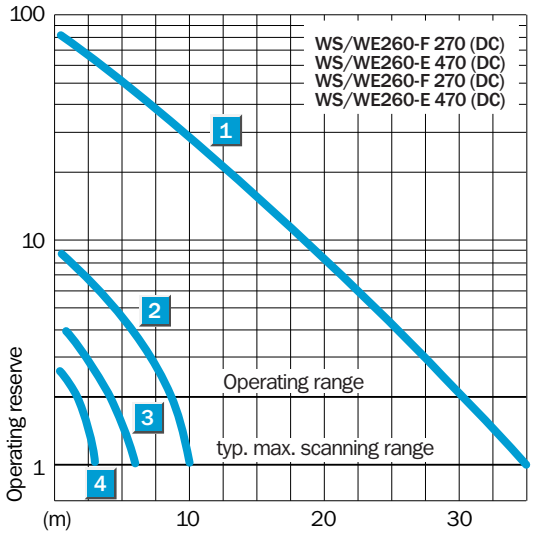

SENSING RANGE DIAGRAM

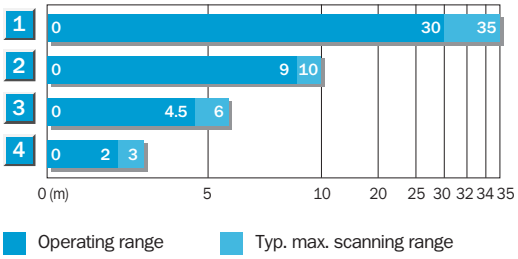

	Scanning range reduction when using slotted masks
1	Without slotted mask
2	Orifice width 5 mm
3	Orifice width 2 mm
4	Orifice width 1 mm

ADJUSTMENTS

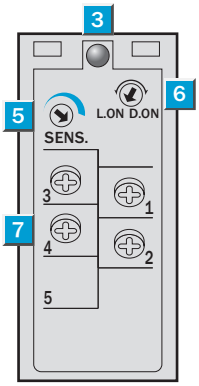

③ LED indicator orange:
③ WE 260: switching output active
③ WS 260: sender active
⑤ LED signal strength indicator (WE)
⑥ Light/ dark rotary switch: L = light switching, D = dark switching
⑦ Terminals

DIMENSIONAL DRAWING

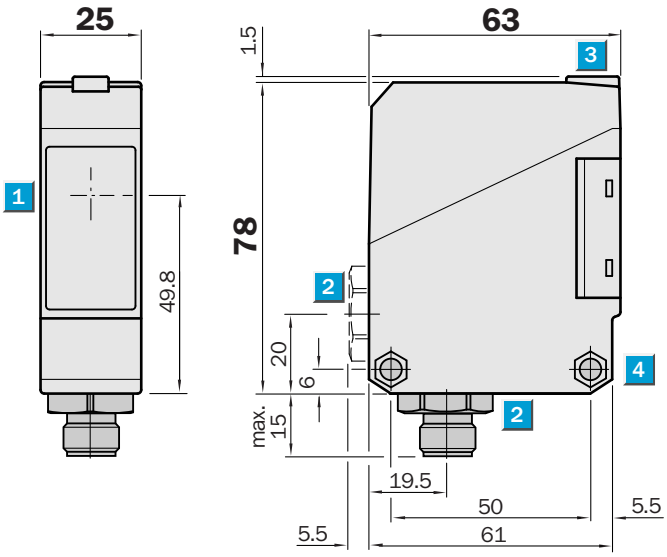

Dimensions in mm (inch)
① Center of optical axis, sender/ receiver
② Cable entry gland 1/2" PF thread for cable diameters from 6 to 10 mm optionally at bottom or rear; or connector M12, bottom
③ LED indicator orange:
③ WE 260: switching output active
③ WS 260: sender active
④ Mounting hole ø 5.2 mm, for M5 hexagon nuts on both sides

Further information as well as suitable accessories, example applications and downloads such as CAD dimensional models, operating instructions and software can be found at www.sick.com/6020974

SICK AG
WALDKIRCH
GERMANY
SICK.COM

SICK AT A GLANCE

SICK is a leading global technology company for intelligent sensors and integrated solutions in industrial automation. Our technologies set benchmarks, making your industrial processes more efficient, safer and more sustainable – both in logistics and manufacturing operations.

SICK combines sensor intelligence with industry expertise and certified consulting services. We provide the ideal foundation for scalable as well as tailor-made automation solutions and create added value along the entire value chain. Our close partnerships with our customers are more than just a promise: Together, we optimize productivity, improve quality, protect health and safety, and help build a sustainable future. All with empathy and trust.

Since 1946, we have been developing innovative technologies with passion and a pioneering spirit. With a global network in around 40 countries, SICK has a global presence and is always close by. The company's headquarters are located in Waldkirch near Freiburg, Germany. Our customers benefit from our understanding of both local and global requirements, which enables us to deliver tailor-made solutions

SICK
Sensor Intelligence