SICK.COM



DATA SHEET

PAC50-FCC

PAC50
Pressure sensors

SICK Sensor Intelligence



Illustration may differ

PRESSURE SENSORS

PAC50-FCC

ORDERING INFORMATION

Type	part no.
PAC50-FCC	1083762

Further device versions and accessories at www.sick.com/PAC50

DETAILED TECHNICAL DATA

FEATURES

Medium	Dry compressed air
Pressure type	Gauge pressure
Pressure unit	bar
Measuring range	–1 bar ... 10 bar
Overpressure safety	15 bar
Process temperature	0 °C ... +60 °C
Maximum ohmic load R_A	Optional, 4 mA ... 20 mA / 0 V... 10 V. Automatic detection depending on connected load or programmable. Output signals can be inverted: 20 mA ... 4 mA / 10 V ... 0 V, Load resistance for current output < 600 Ohm, Load resistance with current output > 3 kOhm
Zero point adjustment	Max. + 5 % of span
Output signal	2 x PNP/NPN/Push-Pull + 4 mA ... 20 mA / 0 V ... 10 V
Diagnostics output	Switching output 2 can be set as diagnostics output
Display	LCD with LED backlight (green/red), can be rotated electronically by 180° Pressure display: 4 digits, 16 segments Pressure unit in display can be switched: bar, MPa, kPa, psi and inHg Update: 1,000, 500, 200, 100 ms (adjustable)
Initialization time	300 ms

MECHANICS/ELECTRONICS

Communication interface	-
Process connection	PIF 4 mm + G ¼ [1]
Housing material	Housing: polycarbonate, Buttons: TPE, DIN rail mounting: POM, seals: NBR
Connection type	Round connector M12 x 1, 5-pin
Supply voltage	17 V DC ... 30 V DC
Power consumption	Max. 40 mA at L^+ = 24 VDC

[1] Bottom side: push-in fitting for 4 mm pneumatic hose, back side: thread G ¼ female according to DIN ISO 16030.

[2] Enclosure rating IP per IEC 60529. The enclosure rating classes specified only apply when connected with female connectors that provide the corresponding enclosure rating.

Electrical safety	Protection class: III Overvoltage protection: 32 V DC Short-circuit protection: Q_A, Q_1, Q_2 towards M and L^+ Reverse polarity protection: L^+ to M
CE-conformity	EMC directive: 2004/108/EC, EN 61326-2-3
Weight sensor	Approx. 40 g
Enclosure rating	IP65 [2] IP67 [2]
Protection class III	✓
MTTF	243.72 years

[1] Bottom side: push-in fitting for 4 mm pneumatic hose, back side: thread G ¼ female according to DIN ISO 16030.

[2] Enclosure rating IP per IEC 60529. The enclosure rating classes specified only apply when connected with female connectors that provide the corresponding enclosure rating.

PERFORMANCE

Non-linearity	≤ ± 0.5 %, of span (Best Fit Straight Line, BFSL) according to IEC 61298-2
Accuracy	≤ ± 1.5 %, of the span (including non-linearity, hysteresis, zero point and full scale error (corresponds to error of measurement as per IEC 61298-2))
Setting accuracy of switching outputs	≤ ± 0.2 % of span
Non-repeatability	≤ ± 0.2 % of the span
Rated temperature range	+10 °C ... +60 °C

AMBIENT DATA

Ambient temperature, operation	0 °C ... +60 °C
Storage temperature	–20 °C ... +80 °C
Relative humidity	≤ 90 %
Shock load	Max. 30 g, xyz according to IEC 60068-2-27 (11 ms, mechanical shock)
Vibration load	Max. 5 g (10 ... 150 Hz), xyz, to DIN EN 60068-2-6

CERTIFICATES

EU declaration of conformity	✓
UK declaration of conformity	✓
ACMA declaration of conformity	✓
China RoHS	✓
China Compulsory Product Certification (CCC) exempt	✓

DIMENSIONAL DRAWING BOTTOM SIDE: PUSH-IN FITTING FOR 4 MM PNEUMATIC HOSE, BACK SIDE: THREAD G ¼ FEMALE

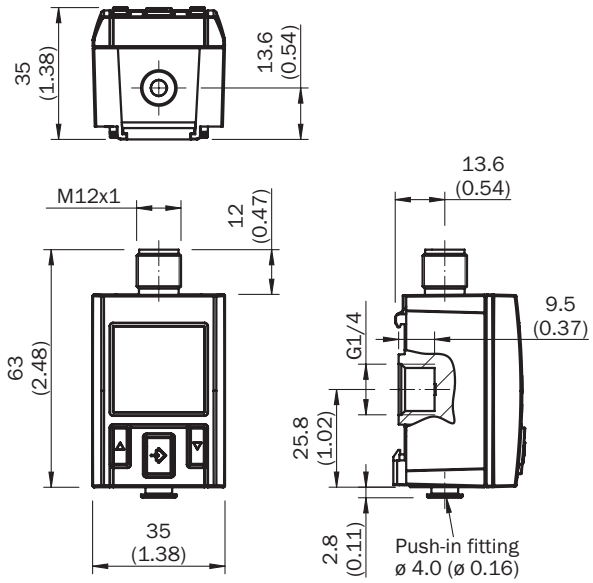

Dimensions in mm (inch)

CONNECTION TYPE ROUND CONNECTOR M12 X 1, 5-PIN

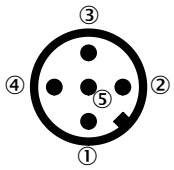

Output signals	Type code	Electrical connection	Pin assignment
2 x digital + analog	PAC50-xxC	M12 x 1, 5 pins	L+ = 1, M = 3, Q1 = 4, Q2 = 2, QA = 5
1 x IO-Link/digital + digital + analog	PAC50-xxF	M12 x 1, 5 pins	L+ = 1, M = 3, C/Q1 = 4, Q2 = 2, QA = 5

INSTRUCTION FOR INSTALLATION

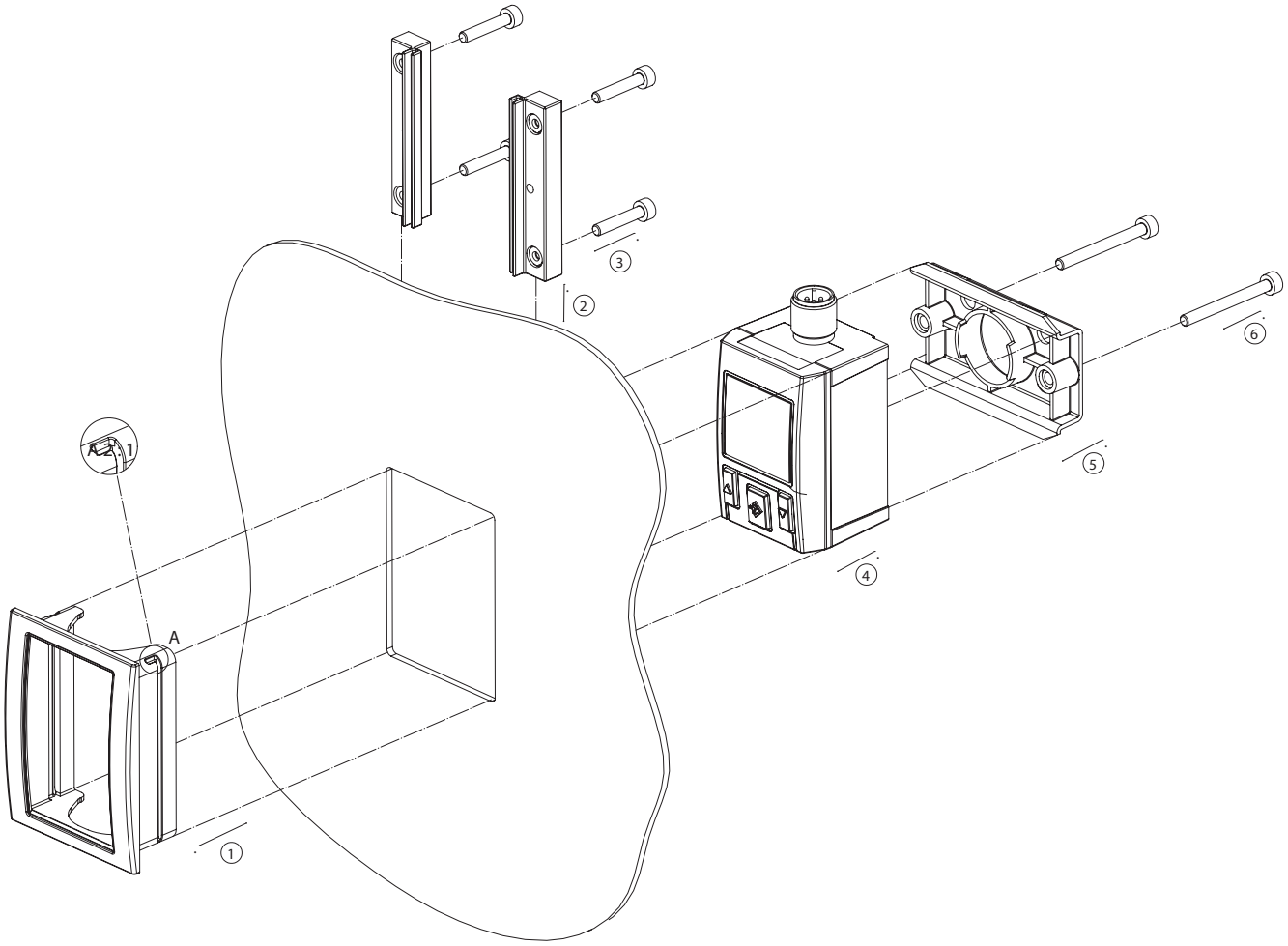

OPENING IN THE SWITCH PANEL

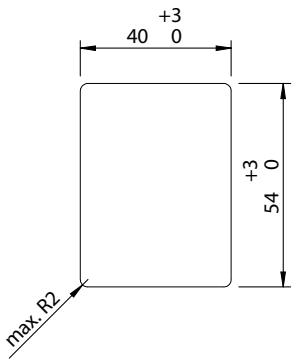

INSTRUCTION FOR INSTALLATION

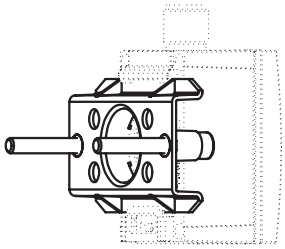

INSTRUCTION FOR INSTALLATION

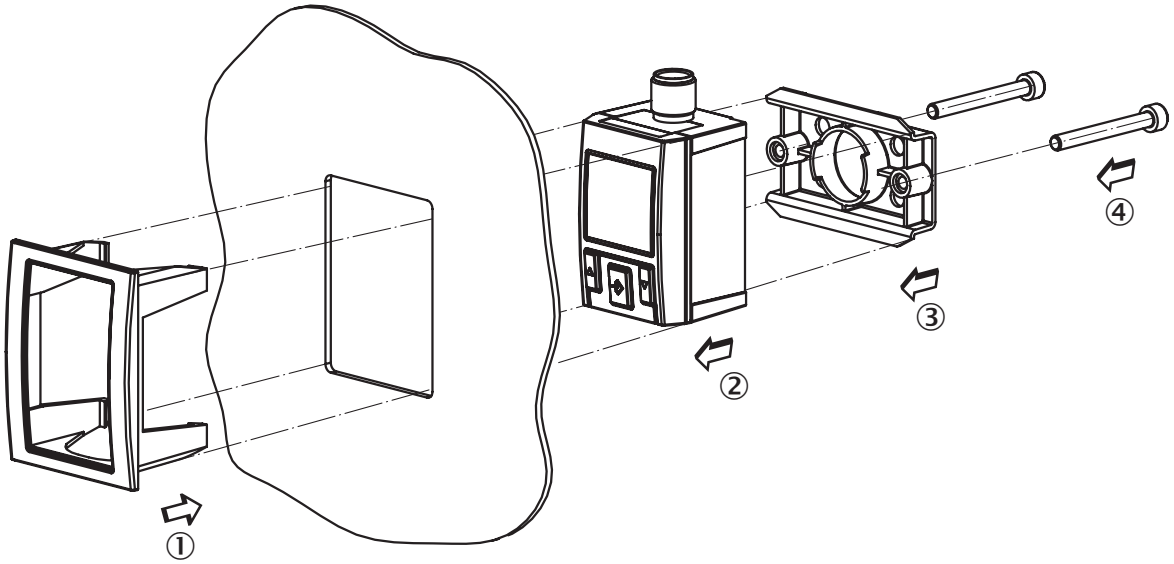

INSTRUCTION FOR INSTALLATION MOUNTING BRACKET

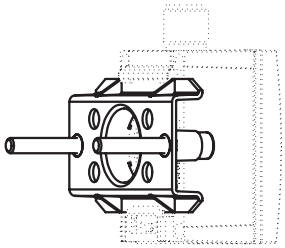

Further information as well as suitable accessories, example applications and downloads such as CAD dimensional models, operating instructions and software can be found at www.sick.com/1083762

SICK AG
WALDKIRCH
GERMANY
SICK.COM

SICK AT A GLANCE

SICK is a leading global technology company for intelligent sensors and integrated solutions in industrial automation. Our technologies set benchmarks, making your industrial processes more efficient, safer and more sustainable – both in logistics and manufacturing operations.

SICK combines sensor intelligence with industry expertise and certified consulting services. We provide the ideal foundation for scalable as well as tailor-made automation solutions and create added value along the entire value chain. Our close partnerships with our customers are more than just a promise: Together, we optimize productivity, improve quality, protect health and safety, and help build a sustainable future. All with empathy and trust.

Since 1946, we have been developing innovative technologies with passion and a pioneering spirit. With a global network in around 40 countries, SICK has a global presence and is always close by. The company's headquarters are located in Waldkirch near Freiburg, Germany. Our customers benefit from our understanding of both local and global requirements, which enables us to deliver tailor-made solutions

SICK

Sensor Intelligence