SICK.COM



DATA SHEET

Panorama 35 mm/ 40 mm

Mirror
Reflectors and optics

SICK Sensor Intelligence



REFLECTORS AND OPTICS

Panorama 35 mm/ 40 mm

ORDERING INFORMATION

Type	part no.
Panorama 35 mm/ 40 mm	2076622

Further device versions and accessories at www.sick.com/Mirror

DETAILED TECHNICAL DATA

CERTIFICATES

China RoHS	✓

DIMENSIONAL DRAWING

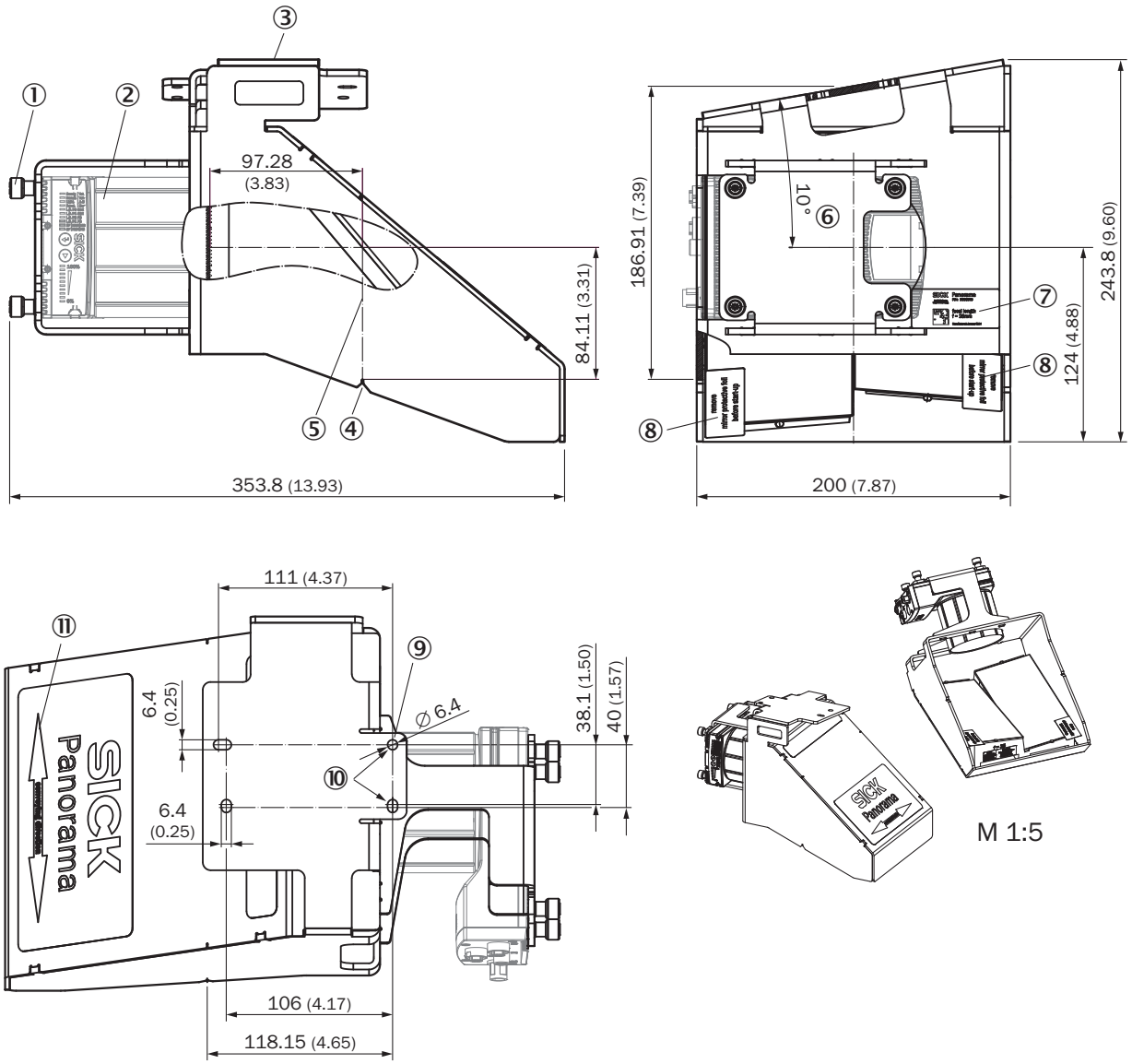

Dimensions in mm (inch)
① pre-mounted fixing screws for Lector
② Lector, not included with delivery
③ measuring point for working distance
④ notch for centrally aligning field of view width
⑤ Optical axis
⑥ skew angle of 10°, determined by the mirror hood
⑦ type label
⑧ mirrors with protective film and information label "Do not remove protective
⑧ film until immediately before commissioning"
⑨ fixing holes for mirror hood (4x)
⑩ fixing holes for mirror hood for side reading
⑪ 'Conveying direction' arrow for aligning the mirror hood with the belt

FIELD OF VIEW, LECTOR65X DYNAMIC FOCUS WITH PANORAMA 35 MM/40 MM

Dimensions in mm (inch/*mil)

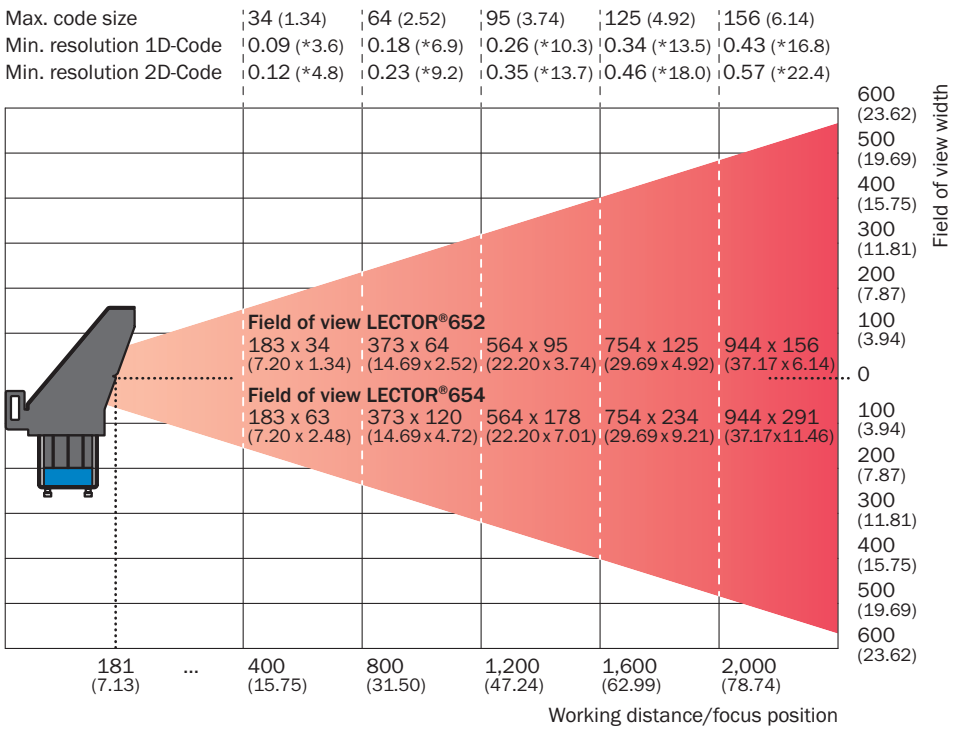

FIELD OF VIEW, LECTOR65X FLEX WITH PANORAMA 35 MM/40 MM

Dimensions in mm (inch/*mil)

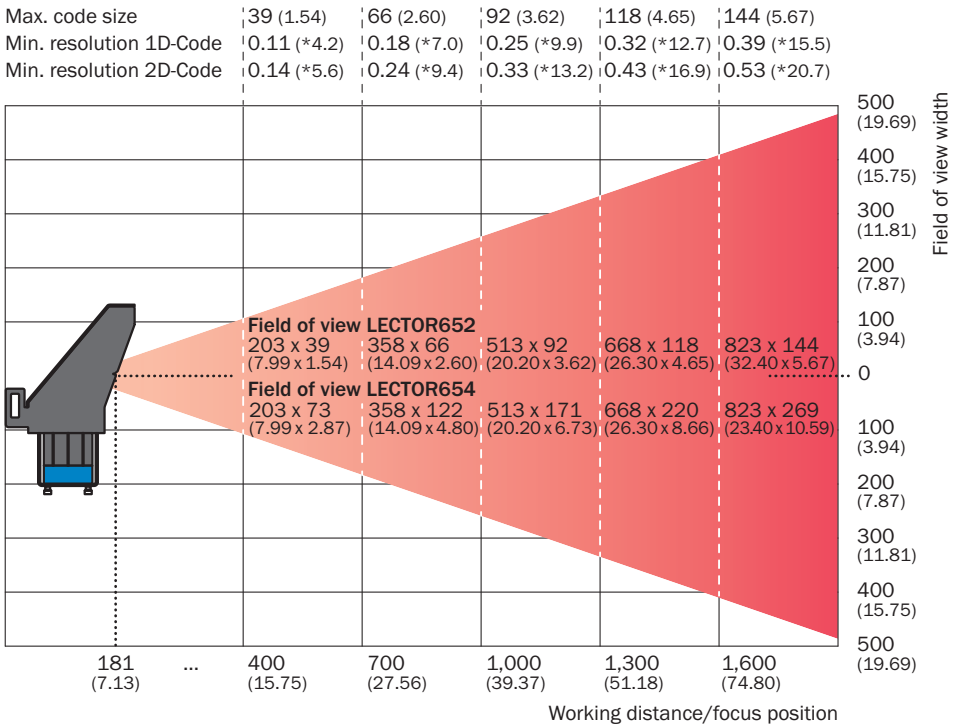

FIELD OF VIEW, LECTOR642 FLEX WITH PANORAMA 35 MM/40 MM

Dimensions in mm (inch/*mil)

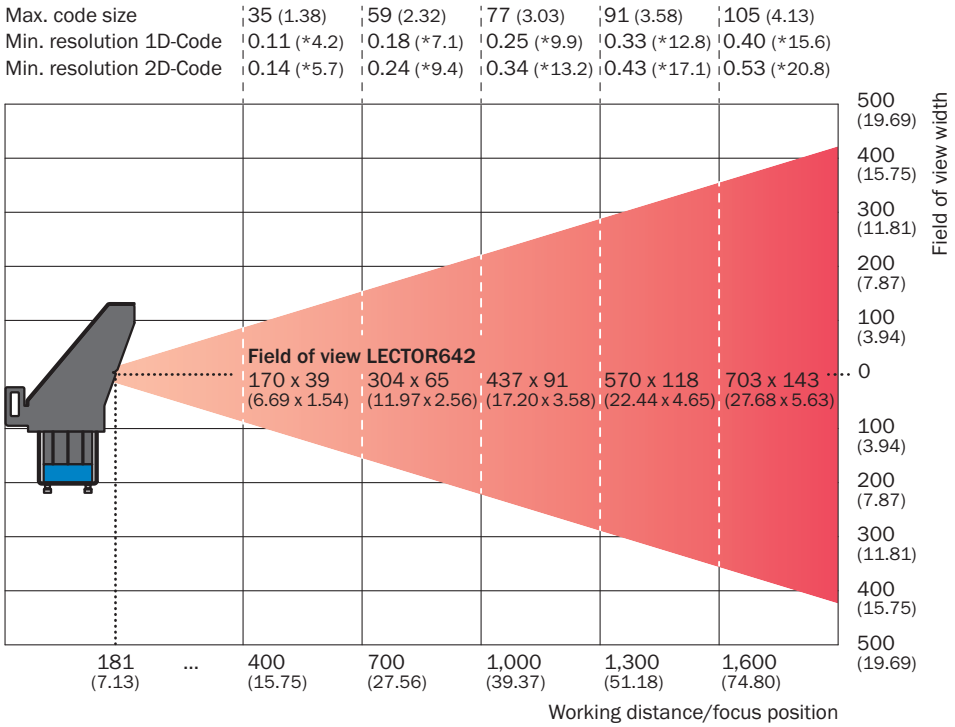

Further information as well as suitable accessories, example applications and downloads such as CAD dimensional models, operating instructions and software can be found at www.sick.com/2076622

SICK AG
WALDKIRCH
GERMANY
SICK.COM

SICK AT A GLANCE

SICK is a leading global technology company for intelligent sensors and integrated solutions in industrial automation. Our technologies set benchmarks, making your industrial processes more efficient, safer and more sustainable – both in logistics and manufacturing operations.

SICK combines sensor intelligence with industry expertise and certified consulting services. We provide the ideal foundation for scalable as well as tailor-made automation solutions and create added value along the entire value chain. Our close partnerships with our customers are more than just a promise: Together, we optimize productivity, improve quality, protect health and safety, and help build a sustainable future. All with empathy and trust.

Since 1946, we have been developing innovative technologies with passion and a pioneering spirit. With a global network in around 40 countries, SICK has a global presence and is always close by. The company's headquarters are located in Waldkirch near Freiburg, Germany. Our customers benefit from our understanding of both local and global requirements, which enables us to deliver tailor-made solutions

SICK

Sensor Intelligence