SICK.COM

DATA SHEET

# C25S-045103C11

C2000 Standard in IP69K Housing
Safety light curtains

SICK Sensor Intelligence

Illustration may differ

## SAFETY LIGHT CURTAINS

# C25S-045103C11

### ORDERING INFORMATION

| Type | part no. |
|---|---|
| C25S-045103C11 | 1024190 |

Further device versions and accessories at www.sick.com/C2000_Standard_in_IP69K_Housing

## DETAILED TECHNICAL DATA

### FEATURES

| | |
|---|---|
| Resolution | 30 mm |
| Protective field height | 450 mm |
| Scanning range | 0 m ... 4.5 m |
| Synchronization | Optical synchronisation |

### SAFETY-RELATED PARAMETERS

| | |
|---|---|
| Type | Type 2 (IEC 61496-1) |
| Safety integrity level | SIL 1 (IEC 61508) |
| Category | Category 2 (EN ISO 13849) |
| Test rate (internal test) | 13 /s (EN ISO 13849) [1] |
| Maximum demand rate | ≤ 8 $min^{-1}$ (EN ISO 13849) [2] |
| Performance level | PL c (EN ISO 13849) |
| $PFH_D$ (mean probability of a dangerous failure per hour) | $2.2 \times 10^{-8}$ (EN ISO 13849) |
| $T_M$ (mission time) | 20 years (EN ISO 13849) |
| Safe state in the event of a fault | At least one OSSD is in the OFF state. |

[1] Internal test. The test rate may not be exceeded if an external test is performed.

[2] Between two requirements on a safety-related response of the device, at least 100 internal or external tests must be carried out.

### FUNCTIONS

| | Functions | Delivery status |
|---|---|---|
| Beam coding | ✓ | Uncoded |

## INTERFACES

| | |
|---|---|
| System connection | Cable 15 m, PVC |
| Cable diameter | 6 mm |
| Conductor cross section | 0.25 mm² |
| Configuration method | Hard wired |
| Display elements | 7-segment display |
| Status display | LEDs |

## ELECTRICAL DATA

| | |
|---|---|
| Protection class | III (EN 50178) |

## MECHANICAL DATA

| | |
|---|---|
| Housing diameter | 50 mm |
| Material | |
| End caps | Stainless steel V4A |
| Plastic tube | PMMA |
| Compensating element (membrane) | PA 6 |
| PG connector | PA 6 |

## AMBIENT DATA

| | |
|---|---|
| Enclosure rating | IP69K, IP67, IP66, IP65 (EN 60529) |
| Ambient operating temperature | 0 °C ... +55 °C |
| Storage temperature | –25 °C ... +70 °C |
| Air humidity | 15 % ... 95 %, Non-condensing |
| Vibration resistance | 5 g, 10 Hz ... 55 Hz (IEC 68-2-6) |
| Shock resistance | 10 g, 16 ms (EN 60068-2-29) |

## OTHER INFORMATION

| | |
|---|---|
| Wave length | 950 nm |

**DIMENSIONAL DRAWING**

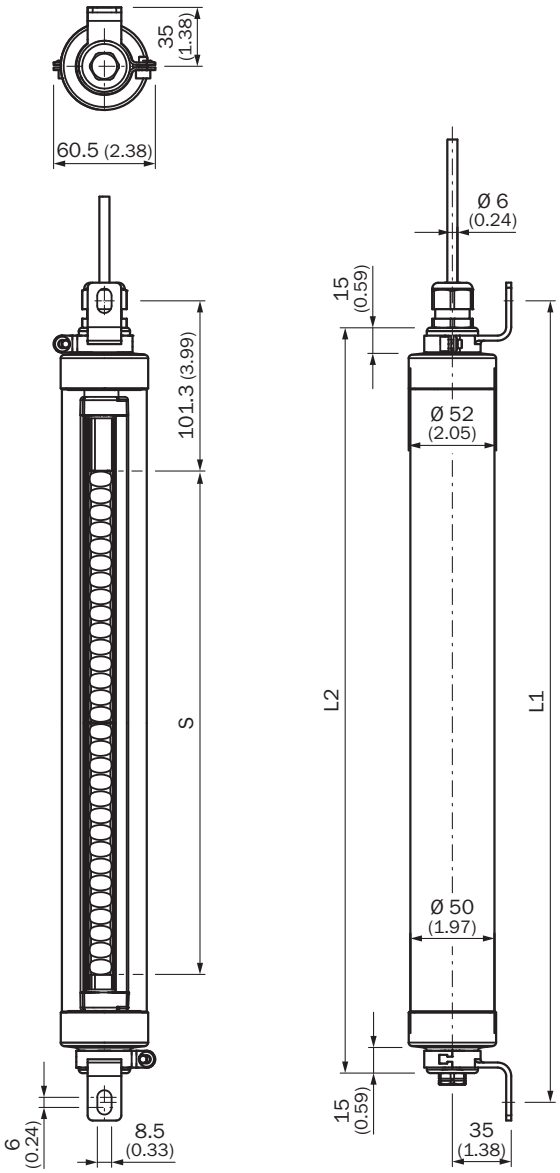


Dimensions in mm (inch)
illustration sender (receiver mirror image)

| Protective field height S | L1 | L2 |
|---|---|---|
| 150 | 357 | 324 |
| 300 | 476 | 443 |
| 450 | 626 | 593 |
| 600 | 777 | 744 |
| 750 | 927 | 894 |
| 900 | 1.078 | 1.045 |
| 1.050 | 1.228 | 1.195 |
| 1.200 | 1.382 | 1.349 |

**CONNECTION DIAGRAM C2000 STANDARD TO UE10-3OS SAFETY RELAY**

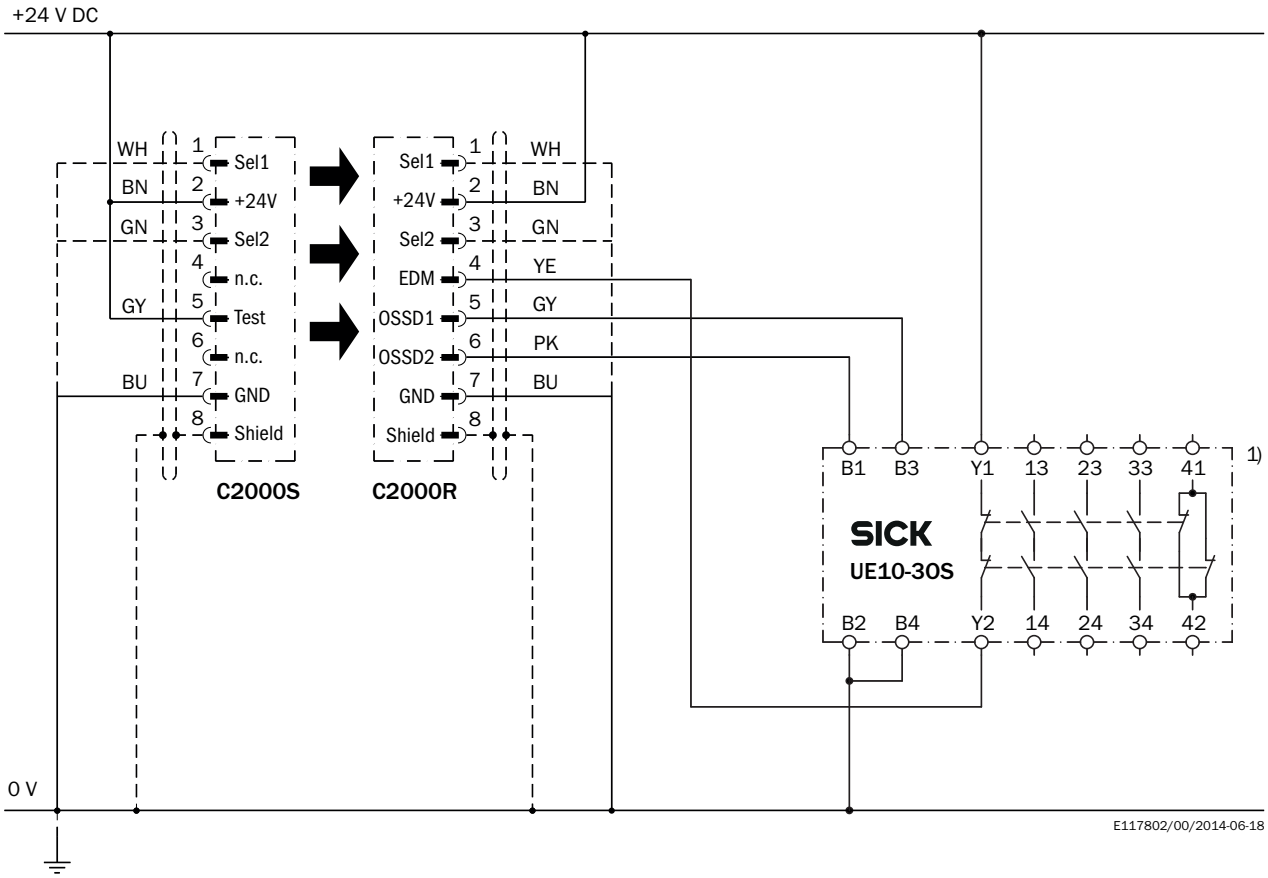


Further information as well as suitable accessories, example applications and downloads such as CAD dimensional models, operating instructions and software can be found at www.sick.com/1024190

SICK AG
WALDKIRCH
GERMANY
SICK.COM

# SICK AT A GLANCE

SICK is a leading global technology company for intelligent sensors and integrated solutions in industrial automation. Our technologies set benchmarks, making your industrial processes more efficient, safer and more sustainable – both in logistics and manufacturing operations.

SICK combines sensor intelligence with industry expertise and certified consulting services. We provide the ideal foundation for scalable as well as tailor-made automation solutions and create added value along the entire value chain. Our close partnerships with our customers are more than just a promise: Together, we optimize productivity, improve quality, protect health and safety, and help build a sustainable future. All with empathy and trust.

Since 1946, we have been developing innovative technologies with passion and a pioneering spirit. With a global network in around 40 countries, SICK has a global presence and is always close by. The company's headquarters are located in Waldkirch near Freiburg, Germany. Our customers benefit from our understanding of both local and global requirements, which enables us to deliver tailor-made solutions

SICK
Sensor Intelligence