SICK.COM

DATA SHEET

Magnet

Position magnets
Magnets

SICK Sensor Intelligence

MAGNETS

Magnet

ORDERING INFORMATION

Type	part no.
Magnet	5327349

Further device versions and accessories at www.sick.com/Position_magnets

DETAILED TECHNICAL DATA

FEATURES

Product segment	Magnets
Product	Position magnets
Description	Magnet with mounting hole for M3 countersunk screw, Ø 15.2 mm, height 6 mm
Suitable for	MPA
Material	Hard ferrite
Dimensions (W x H x L)	6 mm
Diameter	15.2 mm

DIMENSIONAL DRAWING

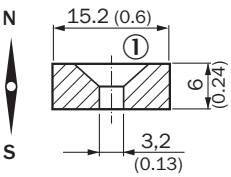

Dimensions in mm (inch)
① Reduction 90°

INSTRUCTION FOR INSTALLATION

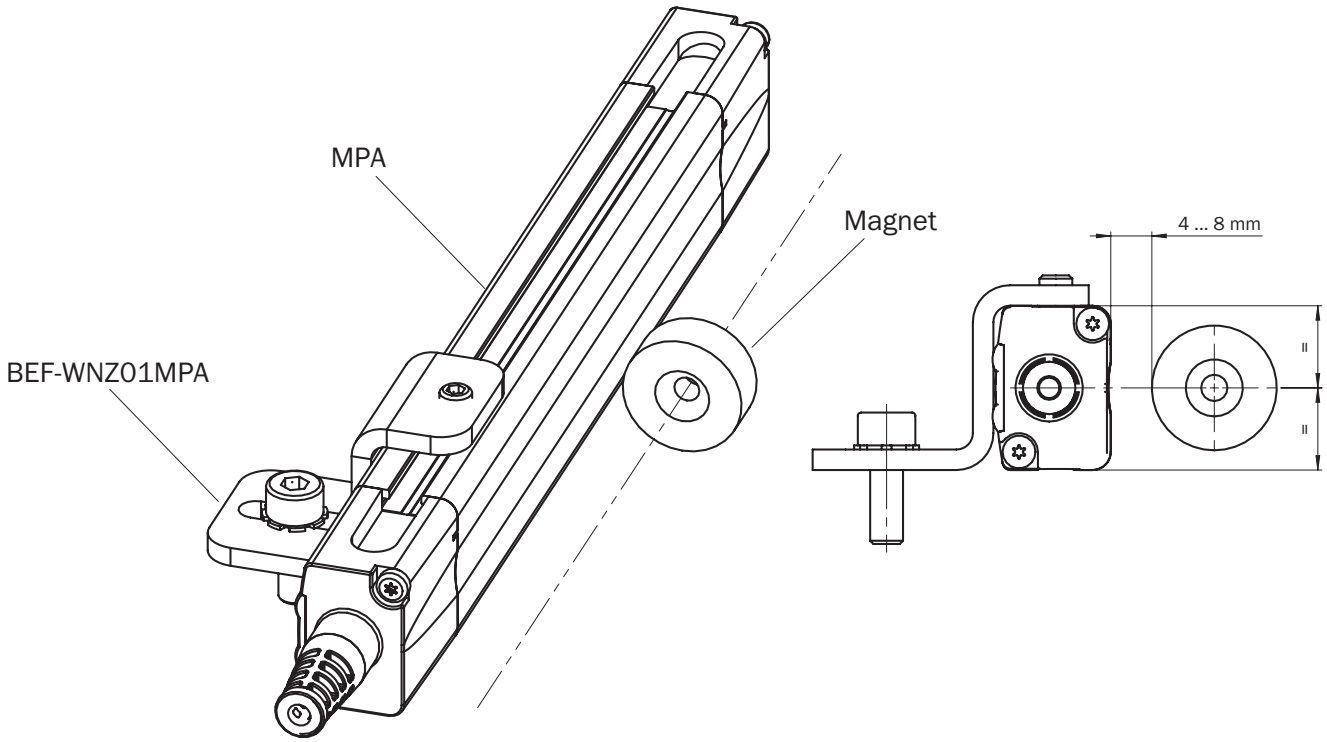

The distance from sensor to magnet must remain constant

Further information as well as suitable accessories, example applications and downloads such as CAD dimensional models, operating instructions and software can be found at www.sick.com/5327349

SICK AG
WALDKIRCH
GERMANY
SICK.COM

SICK AT A GLANCE

SICK is a leading global technology company for intelligent sensors and integrated solutions in industrial automation. Our technologies set benchmarks, making your industrial processes more efficient, safer and more sustainable – both in logistics and manufacturing operations.

SICK combines sensor intelligence with industry expertise and certified consulting services. We provide the ideal foundation for scalable as well as tailor-made automation solutions and create added value along the entire value chain. Our close partnerships with our customers are more than just a promise: Together, we optimize productivity, improve quality, protect health and safety, and help build a sustainable future. All with empathy and trust.

Since 1946, we have been developing innovative technologies with passion and a pioneering spirit. With a global network in around 40 countries, SICK has a global presence and is always close by. The company's headquarters are located in Waldkirch near Freiburg, Germany. Our customers benefit from our understanding of both local and global requirements, which enables us to deliver tailor-made solutions

SICK
Sensor Intelligence