Data sheet

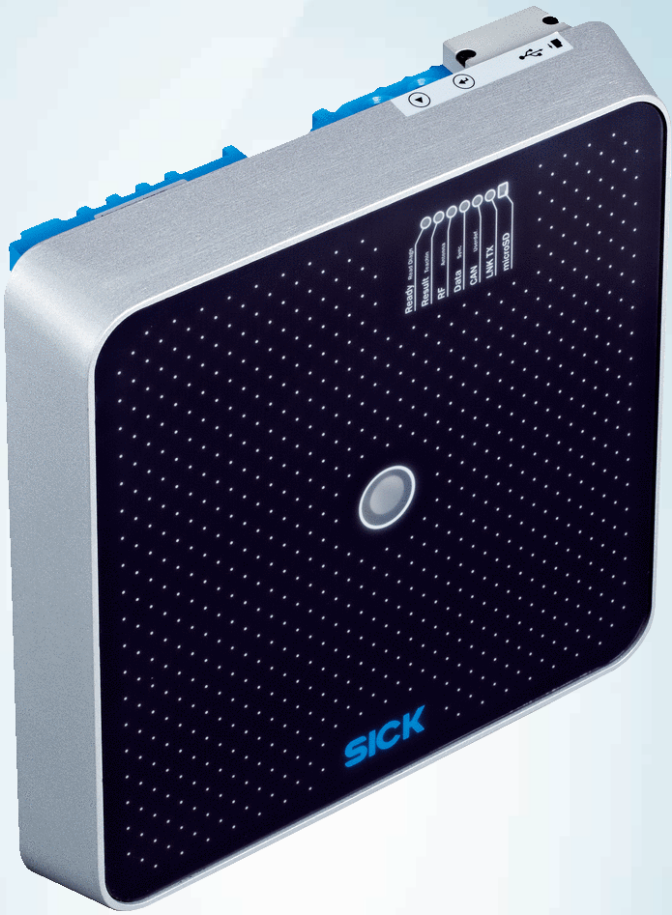

RFU630-13111

RFU63x

RFID

SICK
Sensor Intelligence.

Ordering information

Type	part no.
RFU630-13111	1077862

Other models and accessories ➜ www.sick.com/RFU63x

Detailed technical data

Features

Version	Long Range
Product category	RFID read/write device with integrated antenna
Radio approval	New Zealand (AS/NZ4268)
Frequency band	UHF (860 MHz ... 960 MHz)
Carrier frequency	920.25 MHz ... 927.25 MHz
Output power	3.16 W (EIRP, for integrated antenna, alternatively 29 dBm at external antenna port, power adjustable)
RFID standard	EPCglobal UHF Class 1 Generation 2, ISO/IEC 18000-6 C, RAIN
Modulation	PR-ASK, DSB-ASK
Aperture angle	72°
Reading range	≤ 10 m [1]
Antenna	Integrated
Transmitting power	Adjustable
Polarization	Circular
Axial ratio	Typ. 2 dB
Front-to-back ratio	> 17 dB
Connection of external antennas	3 (Up to + 29 dBm, can be adjusted separately)
Bulk reading	✓
Further functions	Diagnosis, updatable firmware, freely programmable data output format, Heartbeat, triggering, SICK AppSpace functionalities can be enabled with the SD card accessory SDK6U-P00100 (for firmware ≥ 2.0.0)

[1] Depending on transponder used and ambient conditions.

Mechanics/electronics

Connection type	1 x M12, 17-pin male connector, A-coded 1 x M12, 4-pin female connector, D-coded 1 x USB, 5-pin micro-B socket
Supply voltage	18 V DC ... 30 V DC
Power consumption	Typ. 20 W
Housing material	Aluminum die cast
Housing color	Blue, black, silver
Enclosure rating	IP67
Protection class	III
Weight	2.6 kg
Dimensions (L x W x H)	239 mm x 239 mm x 64 mm
MTBF	> 100 years

Interfaces

Ethernet	✓ , TCP/IP, OPC UA
Remark	Companion Spec V1.0 from firmware 2.20
Function	Data interface (read result output), Service interface
Data transmission rate	10/100 MBit/s
PROFINET	✓
Function	PROFINET Single Port, PROFINET Dual Port (optional via external connection module CDF600-2), Data interface (read result output)
Data transmission rate	10/100 MBit/s
EtherNet/IP™	✓
Function	Data interface (read result output)
Data transmission rate	10/100 MBit/s
EtherCAT®	✓
Type of fieldbus integration	Optional over external fieldbus module CDF600
Function	Data interface (read result output)
Serial	✓ , RS-232, RS-422
Remark	RS-422 only via 4-wire
Function	Data interface (read result output), Service interface
Data transmission rate	0.3 kBaud ... 115.2 kBaud, AUX: 57.6 kBaud
CAN	✓
Remark	CSN (SICK CAN Sensor Network)
Function	Data interface (read result output)
PROFIBUS DP	✓
Type of fieldbus integration	Optional over external fieldbus module CDF600-2
Function	Data interface (read result output)
USB	✓
Remark	USB 2.0
Function	Service interface
CANopen	✓

[1] Another alternative is to generate your own configuration tools based on the SICK command language CoLa (e.g. in your own software or on PLC function blocks).

Function	Data interface (read result output)
Digital inputs	2 (physical, 2 additional logical inputs via optional CMC600 parameter memory in CD-B620 / CDM420)
Digital outputs	2 (physical, 2 additional logical outputs via optional CMC600 parameter memory in CD-B620 / CDM420)
Optical indicators	7 LEDs, multi-color (device status) 1 RGB LED (Process feedback)
Acoustic indicators	1 beeper (Feedback)
Control elements	2 buttons (choose and start/stop functions)
Operator interfaces	Web server
Configuration software	SOPAS ET [1]
Programming interface	Application-specific programming using the SICK AppStudio development environment
Memory card	microSD memory card (parameter cloning, data storage)

[1] Another alternative is to generate your own configuration tools based on the SICK command language CoLa (e.g. in your own software or on PLC function blocks).

Ambient data

Electromagnetic compatibility (EMC)	EN 301489-3
Vibration resistance	EN 60068-2-64:2008-02
Shock resistance	EN 60068-2-27:2009-05
Ambient operating temperature	–30 °C ... +60 °C [1]
Storage temperature	–30 °C ... +70 °C
Permissible relative humidity	± 90 %, Non-condensing

[1] From Firmware version V2.02.

Certificates

China RoHS	✓
Profinet certificate	✓
Ethernet/IP certificate	✓
Radio Approval certificate New Zealand	✓
4Dpro	✓
RAIN RFID	✓

Classifications

ECLASS 5.0	27280401
ECLASS 5.1.4	27280401
ECLASS 6.0	27280401
ECLASS 6.2	27280401
ECLASS 7.0	27280401
ECLASS 8.0	27280401
ECLASS 8.1	27280401
ECLASS 9.0	27280401
ECLASS 10.0	27280401
ECLASS 11.0	27280401
ECLASS 12.0	27280401

ETIM 5.0	EC002998
ETIM 6.0	EC002998
ETIM 7.0	EC002998
ETIM 8.0	EC002998
UNSPSC 16.0901	52161523

dimensional drawing RFU63x

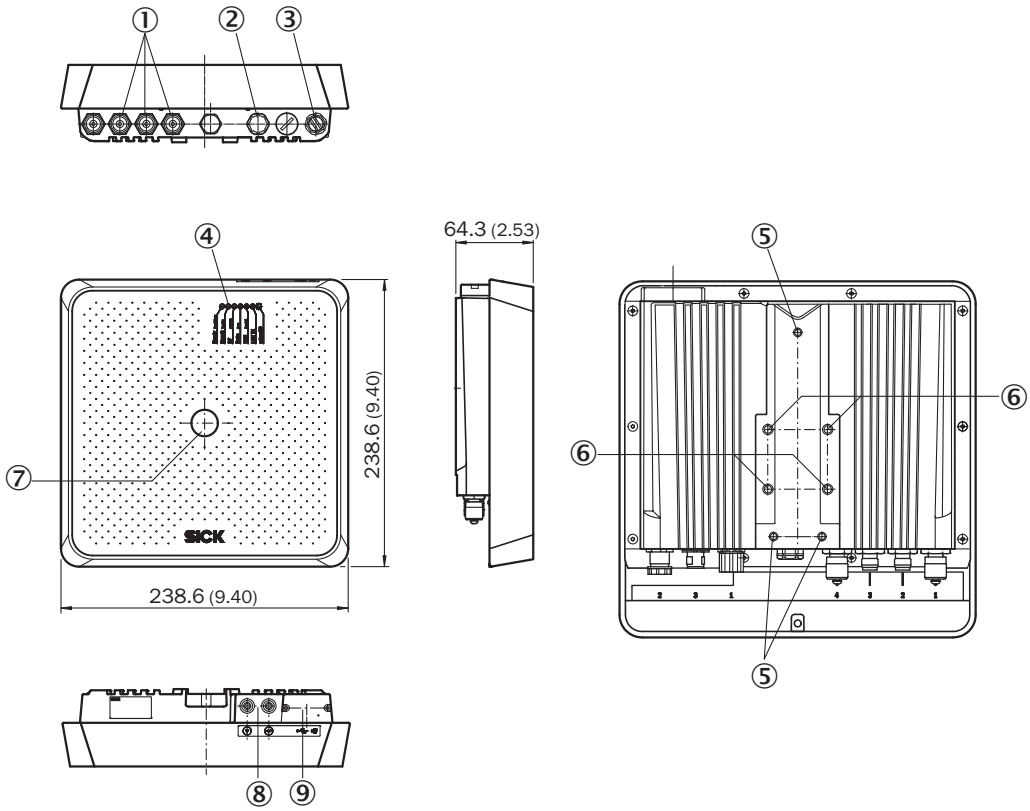

Dimensions in mm (inch)
① 3 x antenna input (“external”, TNC plug, reverse)
② “Power/Serial Data/CAN/I/O” connection
③ Ethernet connection
④ 7 x LED for status display
⑤ 3 x M5 threaded mounting holes, 8 mm deep
⑥ 4 x M6 threaded mounting holes, 11 mm deep
⑦ 1 x LED, multi-colored (process feedback)
⑧ Function buttons
⑨ micro-USB female connector and slot for microSD memory card, behind screw-mounted cover

Radiation pattern

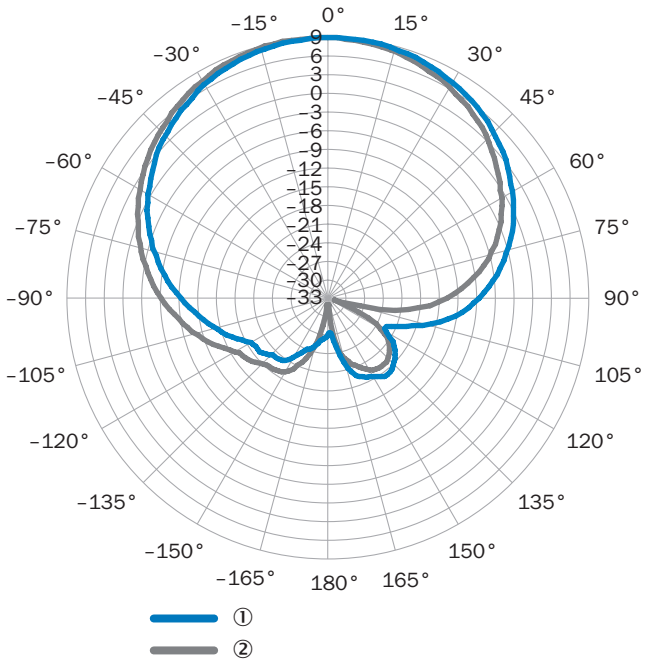

measured antenna gain in dBic at 868.5 MHz, RHCP (right-hand circularly polarized)
① Horizontal plane (azimuth)
② vertical plane (elevation)

Connection diagram EtherCAT®

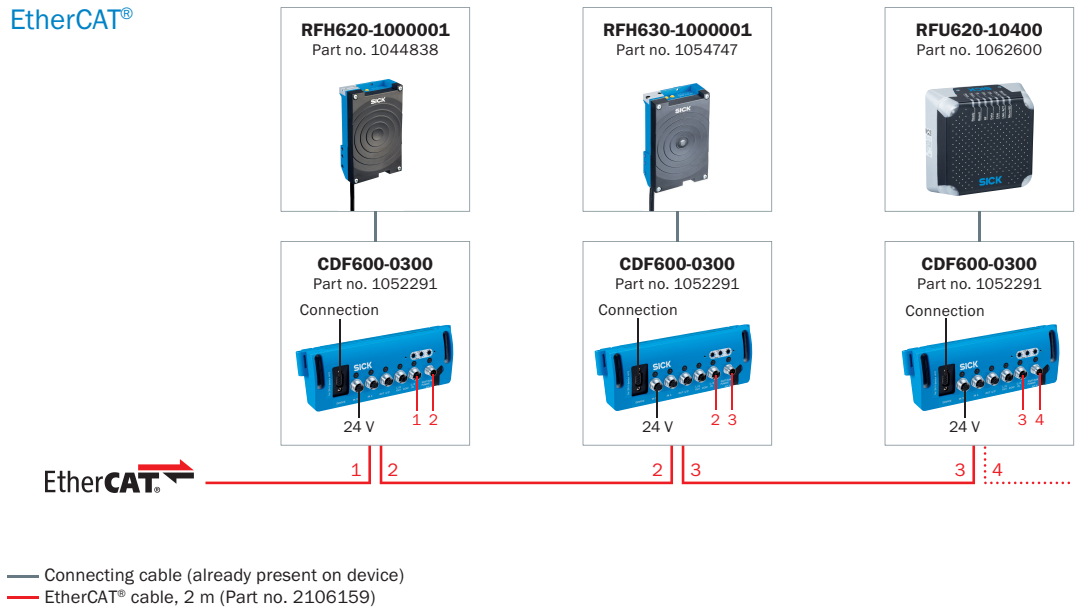

Connection diagram PROFINET IO/RT

PROFINET

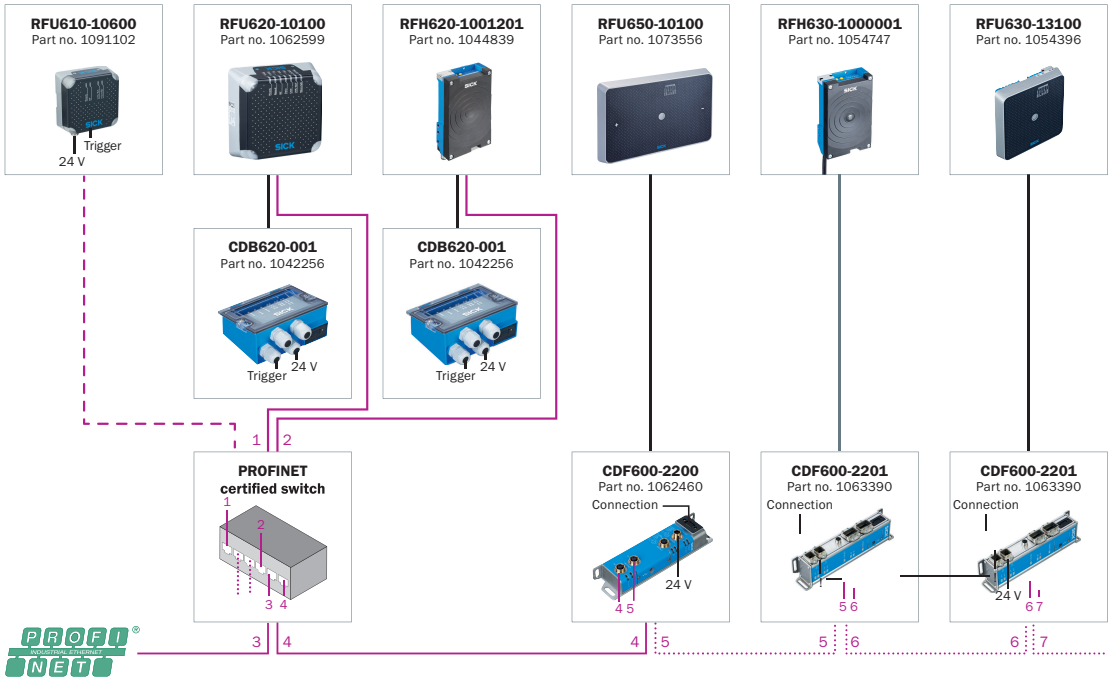

Connecting cable (already present on device)
Connection cable, 2 m (Part no. 6061702)
PROFINET cable, 2 m (Part no. 2106182)
PROFINET cable, 2 m (Part no. 2106258)
PROFINET cable, ready to assemble AIDA plug connectors

System construction

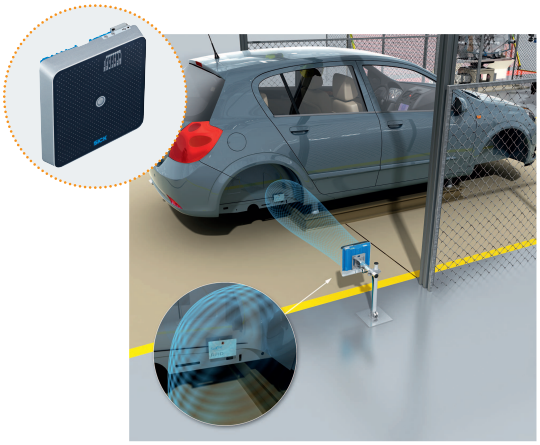

RFU63x

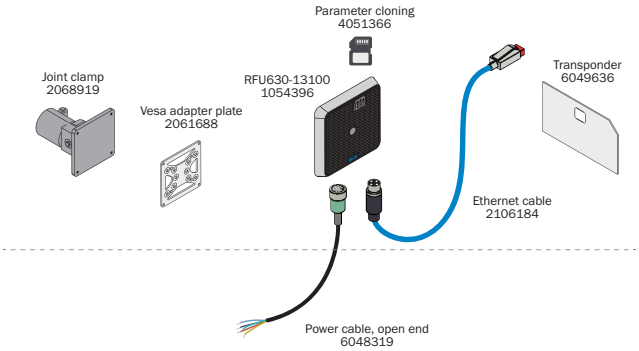

Car body identification in bodyshell construction

Recommended accessories

Other models and accessories ➜ www.sick.com/RFU63x

	Brief description	Type	part no.
Storage media			
	• **Description:** microSD memory card with 1 GB for industrial use	microSD memory card	4051366
Mounting systems			
	• **Description:** Mounting bracket for wall mounting, incl. assembly material	Mounting bracket	2060912
	• **Description:** Pivot mounting bracket, incl. assembly material • **Suitable for:** Pivot mounting bracket incl. mounting material, can be adjusted +/-30°. Device can be replaced without the need to mechanically readjust the bracket.	Mounting bracket	2080967

	Brief description	Type	part no.
connectors and cables			
	• **Connection type head A:** Male connector, Micro-B, 4-pin, straight • **Connection type head B:** Male connector, USB-A, 4-pin, straight • **Signal type:** USB 2.0 • **Cable:** 2 m, 4-wire • **Description:** USB 2.0, unshielded	USB cable	6036106
	• **Connection type head A:** Female connector, M12, 17-pin, straight, A-coded • **Connection type head B:** Male connector, M12, 17-pin, straight, A-coded • **Signal type:** Power, serial, CAN, digital I/Os • **Cable:** 0.9 m, 17-wire • **Description:** Power, suitable for 2 A, shielded, Serial, CAN, Digital I/Os • **Application:** Drag chain operation	YM2A8D-C90XXXF2A8D	6052945
	• **Connection type head A:** Male connector, M12, 4-pin, straight, D-coded • **Connection type head B:** Male connector, RJ45, 4-pin, straight • **Signal type:** Ethernet, PROFINET • **Cable:** 2 m, 4-wire, PUR, halogen-free • **Description:** Ethernet, shielded, PROFINET • **Application:** Drag chain operation, Zones with oils and lubricants	YM2D24-020P-N1MRJA4	2106182
Junction boxes			
		CDB650-204	1064114
RFID transponders			
	• **Carrier frequency:** 865 MHz ... 928 MHz • **Memory capacity (EPC / user memory):** 496/128 Bit (EPC / User Memory) • **Dimensions (L x W x H):** 18 mm x 122 mm x 2 mm	UHF Transponder, Rectangular, global	6088050

SICK AT A GLANCE

SICK is one of the leading manufacturers of intelligent sensors and sensor solutions for industrial applications. A unique range of products and services creates the perfect basis for controlling processes securely and efficiently, protecting individuals from accidents and preventing damage to the environment.

We have extensive experience in a wide range of industries and understand their processes and requirements. With intelligent sensors, we can deliver exactly what our customers need. In application centers in Europe, Asia and North America, system solutions are tested and optimized in accordance with customer specifications. All this makes us a reliable supplier and development partner.

Comprehensive services complete our offering: SICK LifeTime Services provide support throughout the machine life cycle and ensure safety and productivity.

For us, that is "Sensor Intelligence."

WORLDWIDE PRESENCE:

Contacts and other locations –www.sick.com

SICK
Sensor Intelligence.