SICK.COM

DATA SHEET

WTT190L-P3531

WTT190 PowerProx
Time-of-flight sensors

SICK Sensor Intelligence

Illustration may differ

TIME-OF-FLIGHT SENSORS

WTT190L-P3531

ORDERING INFORMATION

Type	part no.
WTT190L-P3531	6055955

Further device versions and accessories at www.sick.com/WTT190_PowerProx

DETAILED TECHNICAL DATA

FEATURES

Functional principle	Photoelectric proximity sensor
Functional principle detail	Background suppression, Optical time-of-flight
Housing design (light emission)	Rectangular
Sensing range max.	200 mm ... 2,500 mm [1]
Sensing range	200 mm ... 2,500 mm [2] [1]
Type of light	Visible red light
Light source	Laser [3]
Light spot size (distance)	Ø 10 mm (2,500 mm)
Wave length	658 nm
Laser class	1 (IEC 60825-1 / CDRH 21 CFR 1040.10 & 1040.11) [4]
Adjustment	Potentiometer, 4 turns (1 x)
Items supplied	BEF-W190 mounting bracket
Safety-related parameters	
$MTTF_D$	215 years
DC_{avg}	0 %

[1] Object with 6 ... 90% remission (based on standard white, DIN 5033).

[2] Adjustable.

[3] Average service life: 100,000 h at T_u = +25 °C.

[4] Do not intentionally look into the laser beam. Never point the laser beam at people's eyes.

ELECTRONICS

Supply voltage U_B	10 V DC ... 30 V DC [1]
Ripple	< 5 V_{pp} [2]
Current consumption	75 mA [3]
Switching output	PNP [4]
Number of switching outputs	1 (Q_1) [4]
Switching mode	Light/dark switching [4]
Switching mode selector	Selectable via light/dark selector
Output current $I_{max.}$	≤ 100 mA
Response time	≤ 0.5 ms [5]
Switching frequency	1,000 Hz [6]
Analog output	-
Input	Sender off
Circuit protection	A [7] B [8] C [9]
Protection class	III
Enclosure rating	IP67
Warm-up time	< 5 min [10]
Initialization time	< 300 ms

[1] Limit values. Operated in short-circuit protected network: max. 8 A.

[2] May not fall below or exceed U_v tolerances.

[3] Without load. At V_s = 24 V.

[4] Q1 = 1 switching threshold, light/dark switching selectable via light/dark selector.

[5] Signal transit time with resistive load.

[6] With light/dark ratio 1:1.

[7] A = V_s connections reverse-polarity protected.

[8] B = inputs and output reverse-polarity protected.

[9] C = interference suppression.

[10] For optimum performance observe max. warm-up time of 5 minutes.

MECHANICS

Dimensions (W x H x D)	17.6 mm x 46.5 mm x 34.1 mm
Housing material	Plastic, ABS
Optics material	Plastic, PMMA
Weight	45 g
Connection type	Cable with plug M12, 5-pin, 0.3 m
Connection type Detail	
Conductor cross section	0.14 mm²
Cable material	Plastic, PVC

AMBIENT DATA

Ambient operating temperature	–10 °C ... +50 °C
Ambient temperature, storage	–40 °C ... +70 °C

CERTIFICATES

EU declaration of conformity	✓
UK declaration of conformity	✓
ACMA declaration of conformity	✓
Moroccan declaration of conformity	✓
China RoHS	✓
China Compulsory Product Certification (CCC) exempt	✓
cRUus certificate	✓
Laser safety (IEC 60825-1) certificate	✓

DIMENSIONAL DRAWING

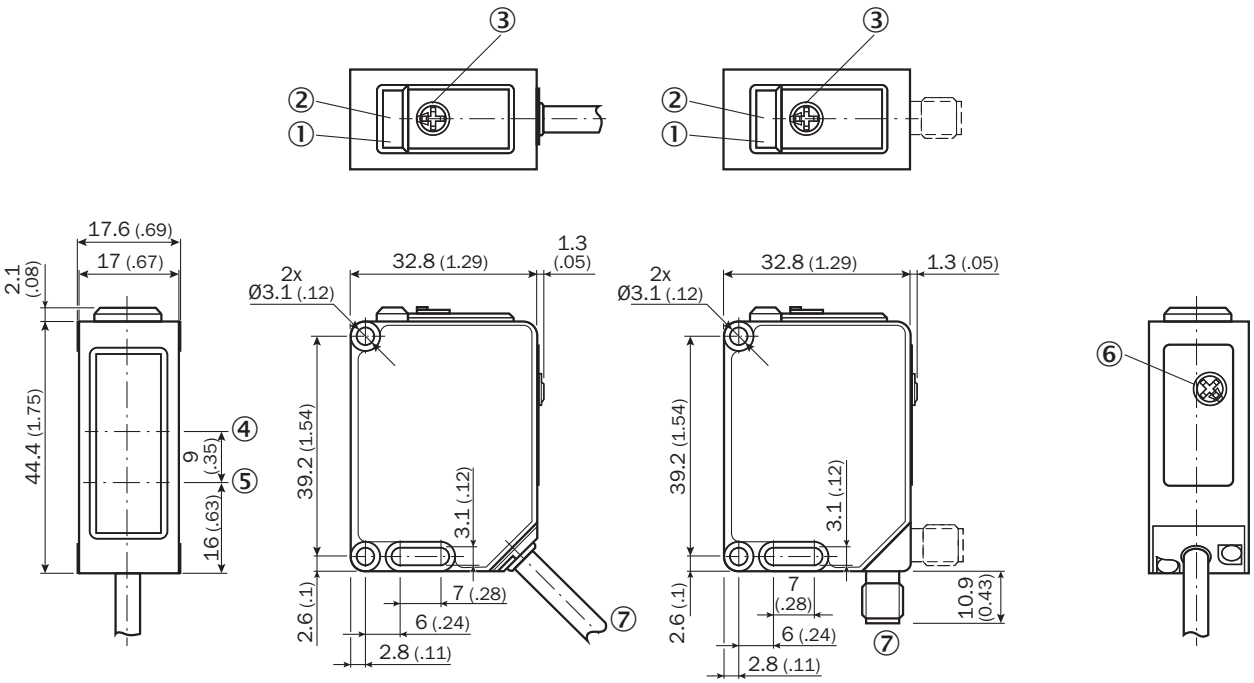

Dimensions in mm (inch)
① Status indicator LED, yellow: Status of output Q1
② Status indicator LED, green/red: power on / stability indicator
③ Potentiometer
④ optical axis, receiver
⑤ optical axis, sender
⑥ Light/dark selector
⑦ Connection

CONNECTION DIAGRAM CD-294

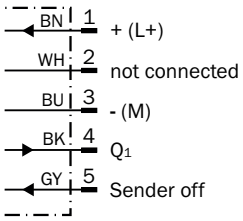

CHARACTERISTIC CURVE

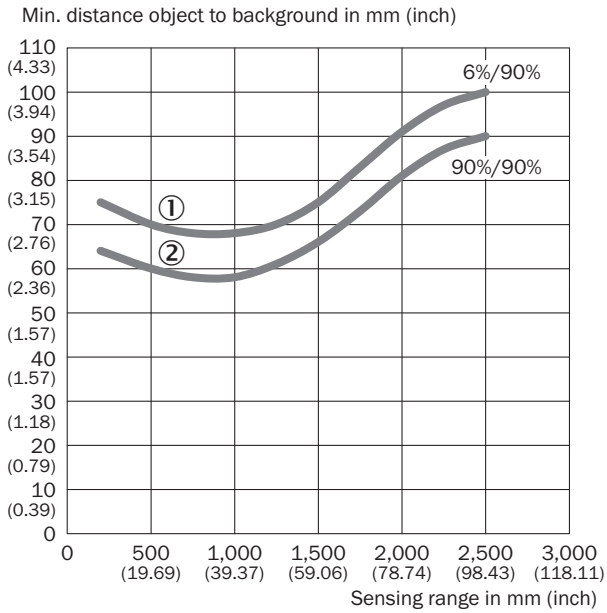

① Sensing range on black, 6% remission factor
② Sensing range on white, 90% remission factor

LIGHT SPOT SIZE

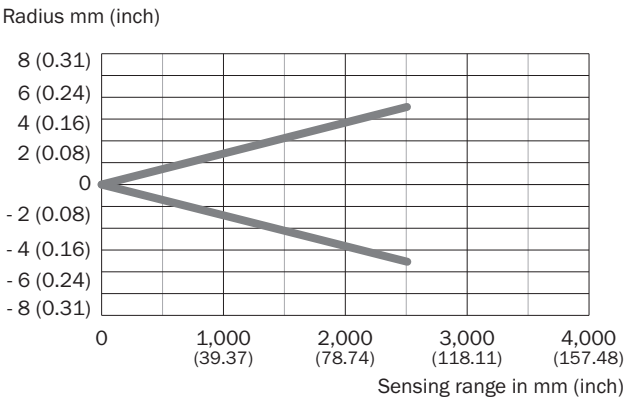

Further information as well as suitable accessories, example applications and downloads such as CAD dimensional models, operating instructions and software can be found at www.sick.com/6055955

SICK AG
WALDKIRCH
GERMANY
SICK.COM

SICK AT A GLANCE

SICK is a leading global technology company for intelligent sensors and integrated solutions in industrial automation. Our technologies set benchmarks, making your industrial processes more efficient, safer and more sustainable – both in logistics and manufacturing operations.

SICK combines sensor intelligence with industry expertise and certified consulting services. We provide the ideal foundation for scalable as well as tailor-made automation solutions and create added value along the entire value chain. Our close partnerships with our customers are more than just a promise: Together, we optimize productivity, improve quality, protect health and safety, and help build a sustainable future. All with empathy and trust.

Since 1946, we have been developing innovative technologies with passion and a pioneering spirit. With a global network in around 40 countries, SICK has a global presence and is always close by. The company's headquarters are located in Waldkirch near Freiburg, Germany. Our customers benefit from our understanding of both local and global requirements, which enables us to deliver tailor-made solutions

SICK
Sensor Intelligence