SICK.COM

DATA SHEET

BEF-MR-010050

Measuring wheels
Measuring wheels and measuring wheel mechanics

SICK Sensor Intelligence

MEASURING WHEELS AND MEASURING WHEEL MECHANICS

BEF-MR-010050

ORDERING INFORMATION

Type	part no.
BEF-MR-010050	5312989

Further device versions and accessories at www.sick.com/Measuring_wheels

DETAILED TECHNICAL DATA

FEATURES

Product segment	Measuring wheels and measuring wheel mechanics
Product	Measuring wheels
Description	Plastic measuring wheel with smooth plastic surface (Hytrel) for 10 mm solid shaft, circumference 500 mm
Circumference	500 mm
Inner diameter	10 mm
Characteristics of the measuring wheel surface	TPE-E smooth
Product version	Measuring wheel
Operating temperature	–10 °C ... +70 °C

DIMENSIONAL DRAWING

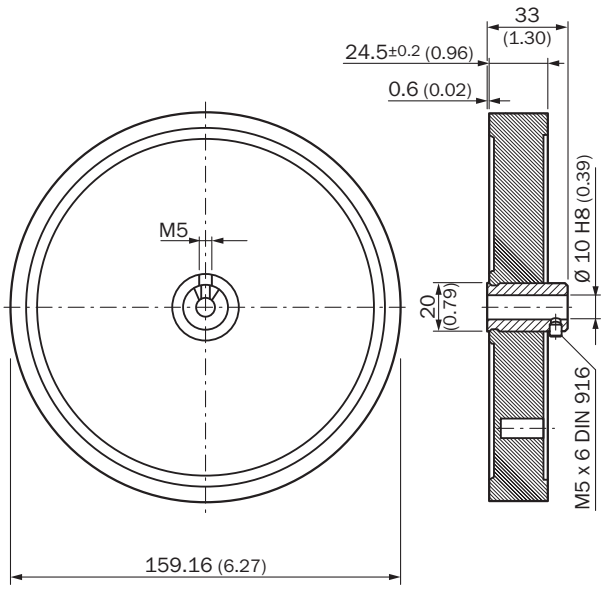

Dimensions in mm (inch)

Further information as well as suitable accessories, example applications and downloads such as CAD dimensional models, operating instructions and software can be found at www.sick.com/5312989

SICK AG
WALDKIRCH
GERMANY
SICK.COM

SICK AT A GLANCE

SICK is a leading global technology company for intelligent sensors and integrated solutions in industrial automation. Our technologies set benchmarks, making your industrial processes more efficient, safer and more sustainable – both in logistics and manufacturing operations.

SICK combines sensor intelligence with industry expertise and certified consulting services. We provide the ideal foundation for scalable as well as tailor-made automation solutions and create added value along the entire value chain. Our close partnerships with our customers are more than just a promise: Together, we optimize productivity, improve quality, protect health and safety, and help build a sustainable future. All with empathy and trust.

Since 1946, we have been developing innovative technologies with passion and a pioneering spirit. With a global network in around 40 countries, SICK has a global presence and is always close by. The company's headquarters are located in Waldkirch near Freiburg, Germany. Our customers benefit from our understanding of both local and global requirements, which enables us to deliver tailor-made solutions

SICK
Sensor Intelligence