SICK.COM

DATA SHEET

# PBT-RB250SG1SSNVMC0Z

PBT
Pressure sensors

SICK Sensor Intelligence

Illustration may differ

## PRESSURE SENSORS

# PBT-RB250SG1SSNVMC0Z

### ORDERING INFORMATION

| Type | part no. |
|---|---|
| PBT-RB250SG1SSNVMC0Z | 6038654 |

Further device versions and accessories at www.sick.com/PBT

## DETAILED TECHNICAL DATA

### FEATURES

| | |
|---|---|
| Medium | Liquid, gaseous |
| Pressure type | Gauge pressure |
| Pressure unit | bar |
| Measuring range | 0 bar ... 250 bar |
| Process temperature | 0 °C ... +80 °C |
| Maximum ohmic load $R_A$ | 4 mA ... 20 mA, 2-wire ($R_A$ ≤ ($L^+$ - 8 V) / 0.02 A [Ohm]), 0 V ... 10 V, 3-wire ($R_A$ > 10 kOhm), 0 V ... 5 V, 3-wire ($R_A$ > 5 kOhm) |
| Output signal | 0 V ... 10 V, 3-wire |

### MECHANICS/ELECTRONICS

| | |
|---|---|
| Communication interface | - |
| Process connection | G ¼ A (ISO 1179-2) |
| Wetted parts | Process connection: 316L stainless steel<br>Measuring chamber: stainless steel 316L |
| Internal transmission fluid | Silicone oil (only with pressure ranges < 0 bar ... 10 bar and ≤ 0 bar abs ... 25 bar abs) |
| Pressure port | Standard |
| Housing material | Stainless steel |
| Connection type | M12 round connector x 1, 4-pin |
| Supply voltage | 14 V DC ... 30 V DC [1] |
| Power consumption | Signal current (max. 25 mA) for current output<br>Max. 8 mA for voltage output signal |
| Electrical safety | Overvoltage protection: 32 V DC, 36 V DC with 4 mA ... 20 mA<br>Short-circuit protection: $Q_A$ towards M<br>Reverse polarity protection: $L^+$ to M |

[1] The pressure transmitter must be supplied with power by a limited energy circuit compliant with 9.3 of UL/EN/IEC 601010-1 or LPS to UL/EN/IEC 60950-1 or Class 2 to UL 1310/UL1585 (NEC or CEC). The power supply must be suitable for operation above 2,000 m if the pressure transmitter is used above this altitude.

[2] Enclosure rating IP per IEC 60529. The enclosure rating classes specified only apply when connected with female connectors that provide the corresponding enclosure rating.

| | |
|---|---|
| | Protection class: III |
| Isolation voltage | 500 V DC |
| Weight sensor | Approx. 80 g |
| Seal | NBR |
| Enclosure rating | IP67 [2] |
| Protection class III | ✓ |
| MTTF | 1,176 years |
| Pressure peak dampening | Through integrated pressure port 0.6 mm or 0.3 mm for process connection G ¼ according to DIN 3852-E (0.3 mm at and above 10 bar) |
| Overvoltage protection | 32 V DC |

[1] The pressure transmitter must be supplied with power by a limited energy circuit compliant with 9.3 of UL/EN/IEC 601010-1 or LPS to UL/EN/IEC 60950-1 or Class 2 to UL 1310/UL1585 (NEC or CEC). The power supply must be suitable for operation above 2,000 m if the pressure transmitter is used above this altitude.

[2] Enclosure rating IP per IEC 60529. The enclosure rating classes specified only apply when connected with female connectors that provide the corresponding enclosure rating.

## PERFORMANCE

| | |
|---|---|
| Non-linearity | ≤ ± 0.5 %, (Best Fit Straight Line, BFSL) according to IEC 61298-2 |
| Accuracy | ≤ ± 1 %, of the span (including non-linearity, hysteresis, zero point and full scale error (corresponds to error of measurement as per IEC 61298-2)) |
| Adjustment accuracy of zero signal | ≤ 0.5 % of span typ., ≤ 0.8 % of span max. (with non-linerarity 0.5 %) |
| Hysteresis | ≤ 0.16 % of the span |
| Non-repeatability | ≤ 0.1 % of the span |
| Response time | < 4 ms |
| Signal noise | ≤ 0.3 % of the span |
| Long-term drift/one-year stability | ≤ 0.1 % of span to IEC 61298-2 |
| Rated temperature range | 0 °C ... +80 °C |
| Service life | Minimum 100 Mio. load cycles |
| Temperature error | ≤ ± 1.0% of the range, typ., ≤ ± 2.5% of the range max. |
| Reference conditions | Reference conditions: According to IEC 61298-1 |

## AMBIENT DATA

| | |
|---|---|
| Ambient temperature, operation | 0 °C ... +80 °C |
| Storage temperature | –40 °C ... +70 °C |
| Relative humidity | 45 % ... 75 % |
| Shock load | 500 g according to IEC 60068-2-27 (mechanical shock) |
| Vibration load | 10 g according to IEC 60068-2-6 (vibration under resonance)<br>20 g optional |

## CERTIFICATES

| | |
|---|---|
| EU declaration of conformity | ✓ |
| UK declaration of conformity | ✓ |
| China RoHS | ✓ |
| China Compulsory Product Certification (CCC) exempt | ✓ |
| cULus certificate | ✓ |

**DIMENSIONAL DRAWING HOUSING WITH CIRCULAR CONNECTOR M12 X 1, IP67**

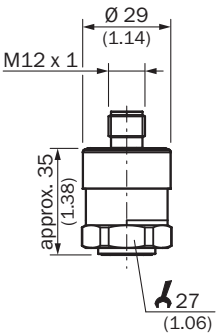


Dimensions in mm (inch)

**DIMENSIONAL DRAWING G ¼ A DIN 3852-E**

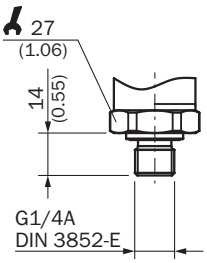


Dimensions in mm (inch)

**CONNECTION TYPE**

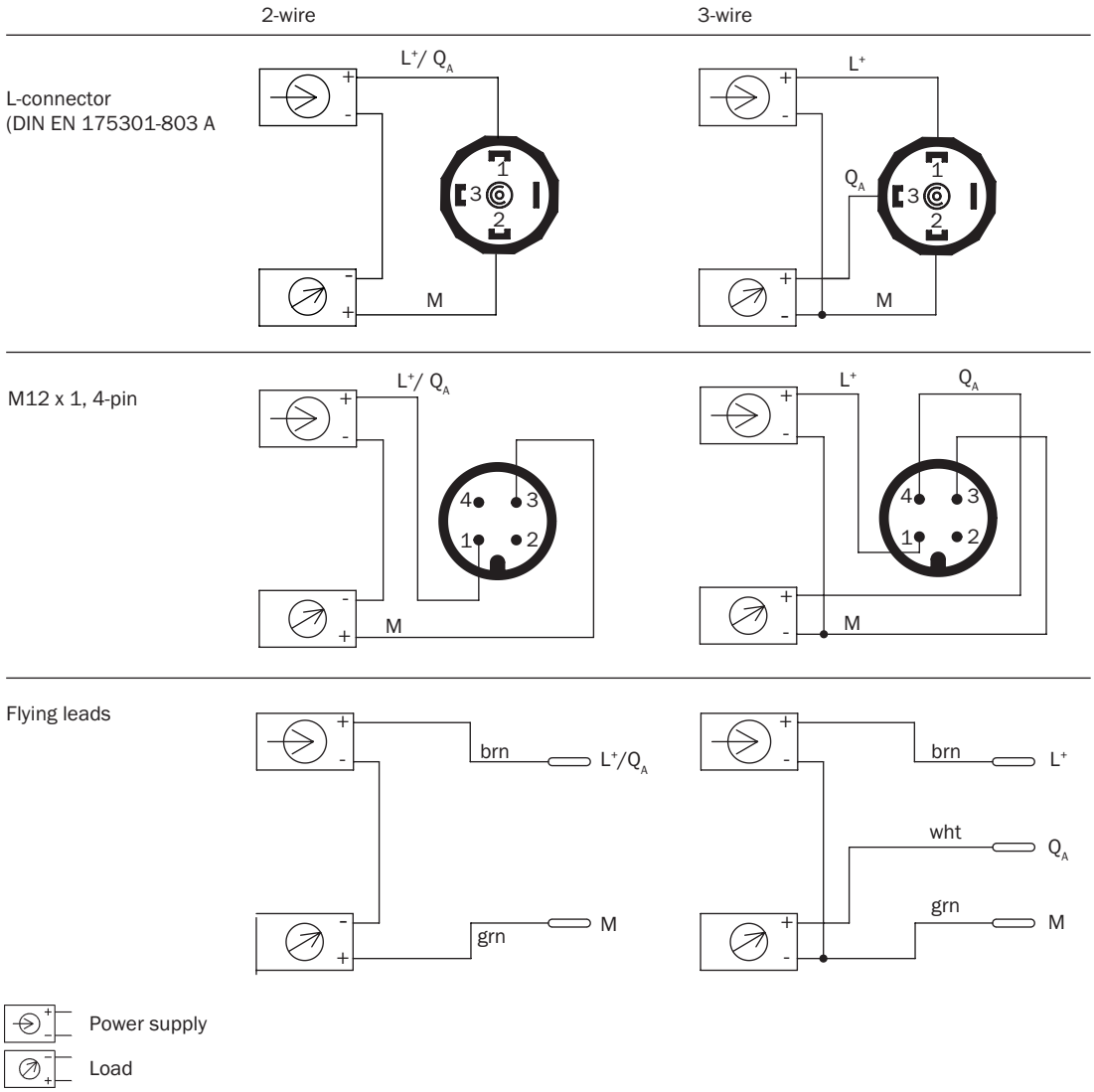


Further information as well as suitable accessories, example applications and downloads such as CAD dimensional models, operating instructions and software can be found at www.sick.com/6038654

SICK AG
WALDKIRCH
GERMANY
SICK.COM

# SICK AT A GLANCE

SICK is a leading global technology company for intelligent sensors and integrated solutions in industrial automation. Our technologies set benchmarks, making your industrial processes more efficient, safer and more sustainable – both in logistics and manufacturing operations.

SICK combines sensor intelligence with industry expertise and certified consulting services. We provide the ideal foundation for scalable as well as tailor-made automation solutions and create added value along the entire value chain. Our close partnerships with our customers are more than just a promise: Together, we optimize productivity, improve quality, protect health and safety, and help build a sustainable future. All with empathy and trust.

Since 1946, we have been developing innovative technologies with passion and a pioneering spirit. With a global network in around 40 countries, SICK has a global presence and is always close by. The company's headquarters are located in Waldkirch near Freiburg, Germany. Our customers benefit from our understanding of both local and global requirements, which enables us to deliver tailor-made solutions

SICK
Sensor Intelligence