SICK.COM

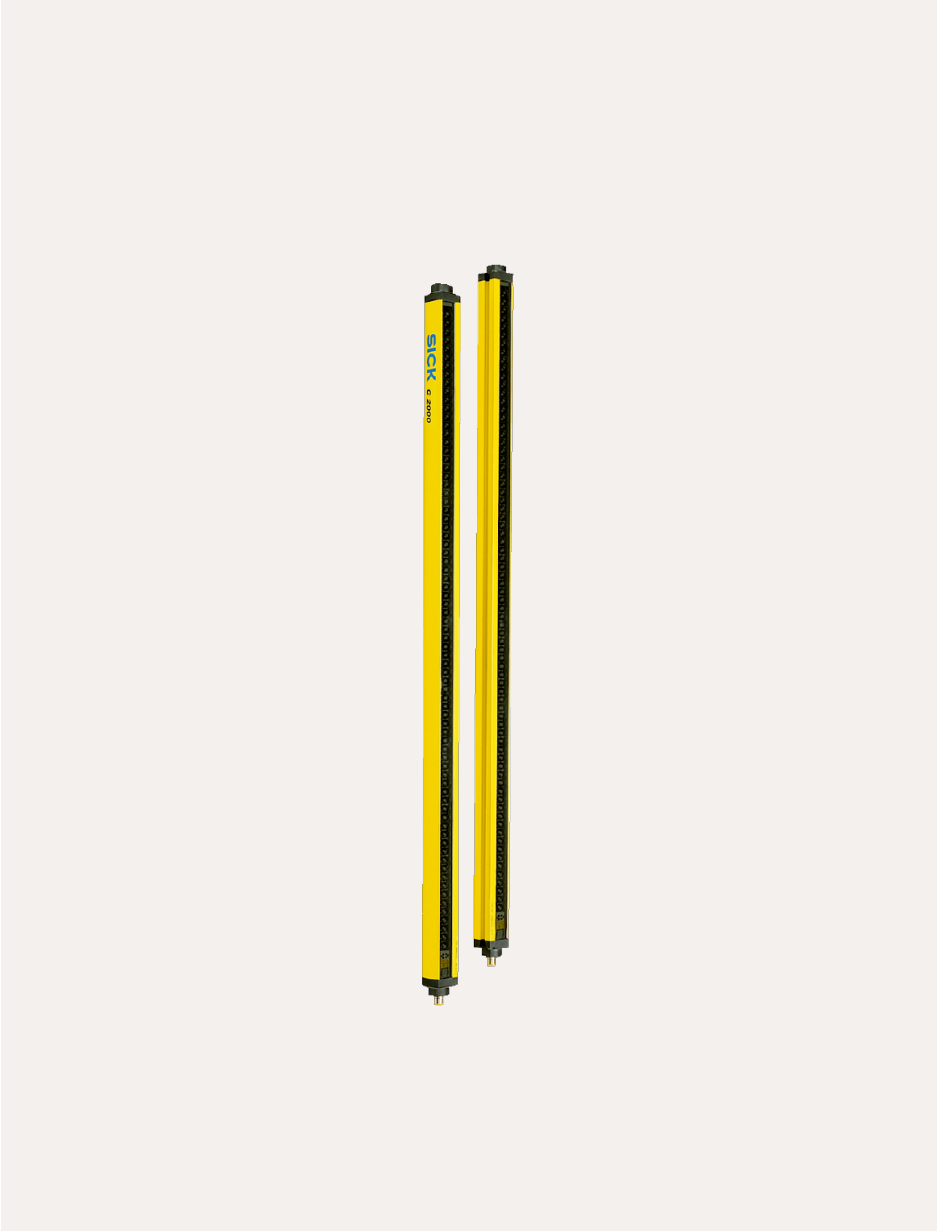


DATA SHEET

# C20E-090303A21

C2000 Cascadable
Safety light curtains

SICK Sensor Intelligence

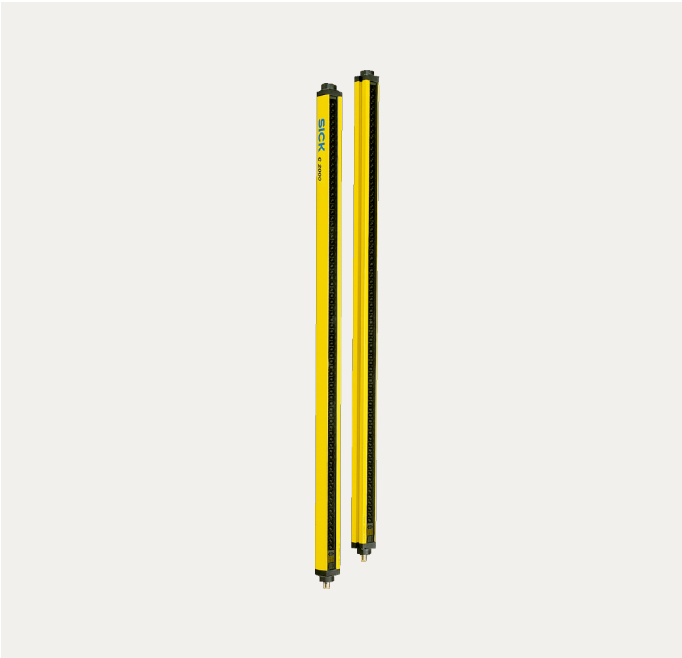

Illustration may differ

## SAFETY LIGHT CURTAINS

# C20E-090303A21

### ORDERING INFORMATION

| Type | part no. |
|---|---|
| C20E-090303A21 | 1018107 |

Further device versions and accessories at www.sick.com/C2000_Cascadable

## DETAILED TECHNICAL DATA

### FEATURES

| | |
|---|---|
| Resolution | 30 mm |
| Protective field height | 900 mm |
| Synchronization | Optical synchronisation |

### SAFETY-RELATED PARAMETERS

| | |
|---|---|
| Type | Type 2 (IEC 61496-1) |
| Safety integrity level | SIL 1 (IEC 61508) |
| Category | Category 2 (EN ISO 13849) |
| Test rate (internal test) | 13 /s (EN ISO 13849) [1] |
| Maximum demand rate | ≤ 8 $min^{-1}$ (EN ISO 13849) [2] |
| Performance level | PL c (EN ISO 13849) |
| $PFH_D$ (mean probability of a dangerous failure per hour) | $2.2 \times 10^{-8}$ (EN ISO 13849) |
| $T_M$ (mission time) | 20 years (EN ISO 13849) |
| Safe state in the event of a fault | At least one OSSD is in the OFF state. |

[1] Internal test. The test rate may not be exceeded if an external test is performed.

[2] Between two requirements on a safety-related response of the device, at least 100 internal or external tests must be carried out.

### INTERFACES

| | |
|---|---|
| System connection | Male connector M12, 8-pin |
| Conductor cross section | 0.25 $mm^2$ |
| Permitted cable length | ≤ 15 m [1] |
| Extension connection | Female connector M12, 8-pin |
| Configuration method | Hard wired |

[1] The length of the connecting cable is limited, because wire resistance max. 4 Ohm.

| | |
|---|---|
| Display elements | LED/7-segment |

[1] The length of the connecting cable is limited, because wire resistance max. 4 Ohm.

## ELECTRICAL DATA

| | |
|---|---|
| Protection class | III (EN 50178) |
| Output signal switching devices (OSSDs) | |
| Type of output | 2 PNP semiconductors, short-circuit protected, cross-circuit monitored |

## AMBIENT DATA

| | |
|---|---|
| Enclosure rating | IP65 (EN 60529) |
| Ambient operating temperature | 0 °C ... +55 °C |
| Storage temperature | –25 °C ... +70 °C |
| Air humidity | 15 % ... 95 %, Non-condensing |
| Vibration resistance | 5 g, 10 Hz ... 55 Hz (IEC 68-2-6) |
| Shock resistance | 10 g, 16 ms (EN 60068-2-29) |

### DIMENSIONAL DRAWING PROTECTIVE FIELD HEIGHTS 150 MM TO 1200 MM

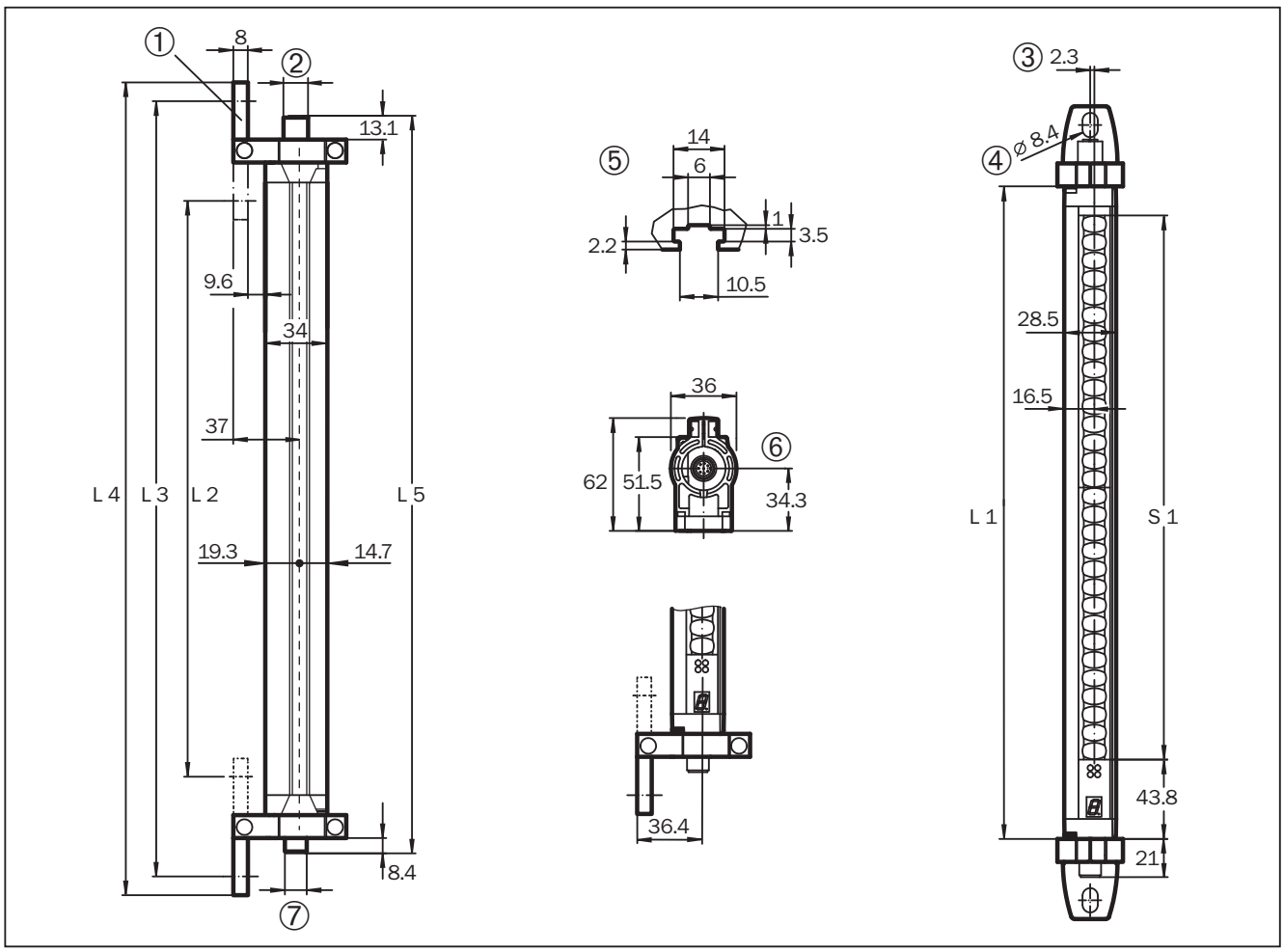


Dimensions in mm (inch)
sender with swivel mount, small housing (receiver mirror image)

| S1 | L1 | L2 | L3 | L4 | L5 |
|---|---|---|---|---|---|
| 300 (11.81) | 364 (14.33) | 322 (12.68) | 432 (17.01) | 452 (17.80) | 411 (16.18) |

| S1 | L1 | L2 | L3 | L4 | L5 |
|---|---|---|---|---|---|
| 450 (17.72) | 515 (20.28) | 473 (18.62) | 582 (22.91) | 603 (23.74) | 562 (22.13) |
| 600 (23.62) | 666 (26.22) | 623 (24.53) | 733 (28.86) | 754 (29.69) | 712 (28.03) |
| 750 (29.53) | 816 (32.13) | 774 (30.47) | 884 (34.80) | 904 (35.59) | 863 (33.98) |
| 900 (35.43) | 967 (38.07) | 924 (36.38) | 1,034 (40.71) | 1,055 (41.54) | 1,013 (39.88) |
| 1,050 (41.34) | 1,117 (43.98) | 1,075 (42.32) | 1,185 (46.65) | 1,205 (47.44) | 1,164 (45.83) |
| 1,200 (47.24) | 1,266 (49.84) | 1,224 (48.19) | 1,334 (52.52) | 1,354 (53.31) | 1,313 (51.69) |

Further information as well as suitable accessories, example applications and downloads such as CAD dimensional models, operating instructions and software can be found at www.sick.com/1018107

SICK AG
WALDKIRCH
GERMANY
SICK.COM

# SICK AT A GLANCE

SICK is a leading global technology company for intelligent sensors and integrated solutions in industrial automation. Our technologies set benchmarks, making your industrial processes more efficient, safer and more sustainable – both in logistics and manufacturing operations.

SICK combines sensor intelligence with industry expertise and certified consulting services. We provide the ideal foundation for scalable as well as tailor-made automation solutions and create added value along the entire value chain. Our close partnerships with our customers are more than just a promise: Together, we optimize productivity, improve quality, protect health and safety, and help build a sustainable future. All with empathy and trust.

Since 1946, we have been developing innovative technologies with passion and a pioneering spirit. With a global network in around 40 countries, SICK has a global presence and is always close by. The company's headquarters are located in Waldkirch near Freiburg, Germany. Our customers benefit from our understanding of both local and global requirements, which enables us to deliver tailor-made solutions

SICK
Sensor Intelligence