SICK.COM

DATA SHEET

# VL18-3P3440

V18
Photoelectric sensors

SICK Sensor Intelligence

Illustration may differ

## PHOTOELECTRIC SENSORS

# VL18-3P3440

### ORDERING INFORMATION

| Type | part no. |
|---|---|
| VL18-3P3440 | 6013581 |

Further device versions and accessories at www.sick.com/V18

## DETAILED TECHNICAL DATA

### FEATURES

| | |
|---|---|
| Functional principle | Photoelectric retro-reflective sensor |
| Dimensions (W x H x D) | 18 mm x 18 mm x 75 mm |
| Housing design (light emission) | Cylindrical |
| Housing length | 75 mm |
| Thread diameter (housing) | M18 x 1 |
| Optical axis | Radial |
| Sensing range max. | 0.05 m ... 3.7 m [1] |
| Sensing range | 0.05 m ... 3 m [1] |
| Focus | Approx. 2.8° |
| Type of light | Visible red light |
| Light source | LED [2] |
| Light spot size (distance) | Ø 150 mm (3 m) |
| Angle of dispersion | Approx. 2.8° |
| Adjustment | Potentiometer, 270° (Sensitivity) |

[1] Reflector C110A.

[2] Average service life: 100,000 h at $T_U$ = +25 °C.

## MECHANICS/ELECTRONICS

| | |
|---|---|
| Supply voltage $U_B$ | 10 V DC ... 30 V DC [1] |
| Ripple | ± 10 % [2] |
| Current consumption | 30 mA [3] |
| Switching output | PNP |
| Switching mode | Dark switching |
| Output current $I_{max.}$ | ≤ 100 mA |
| Response time | ≤ 2 ms [4] |
| Switching frequency | 250 Hz [5] |
| Connection type | Male connector M12, 4-pin |
| Circuit protection | A [6]<br>B [7]<br>C [8]<br>D [9] |
| Protection class | III |
| Weight | 120 g |
| Polarizing filter | ✓ |
| Housing material | Metal, Nickel-plated brass |
| Optics material | Plastic, PMMA |
| Enclosure rating | IP67 |
| Ambient operating temperature | –25 °C ... +70 °C |
| UL File No. | NMFT2.E175606 |

[1] Limit values.

[2] May not fall below or exceed $U_V$ tolerances.

[3] Without load.

[4] Signal transit time with resistive load.

[5] With light/dark ratio 1:1.

[6] A = $V_S$ connections reverse-polarity protected.

[7] B = inputs and output reverse-polarity protected.

[8] C = interference suppression.

[9] D = outputs overcurrent and short-circuit protected.

## CERTIFICATES

| | |
|---|---|
| EU declaration of conformity | ✓ |
| UK declaration of conformity | ✓ |
| ACMA declaration of conformity | ✓ |
| Moroccan declaration of conformity | ✓ |
| China RoHS | ✓ |
| China Compulsory Product Certification (CCC) exempt | ✓ |
| cRUus certificate | ✓ |

## ADJUSTMENTS

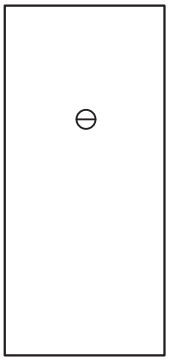

## CONNECTION TYPE

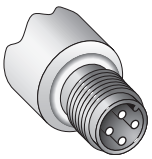

## CONNECTION DIAGRAM CD-066

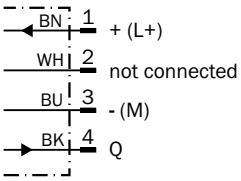


## CHARACTERISTIC CURVE

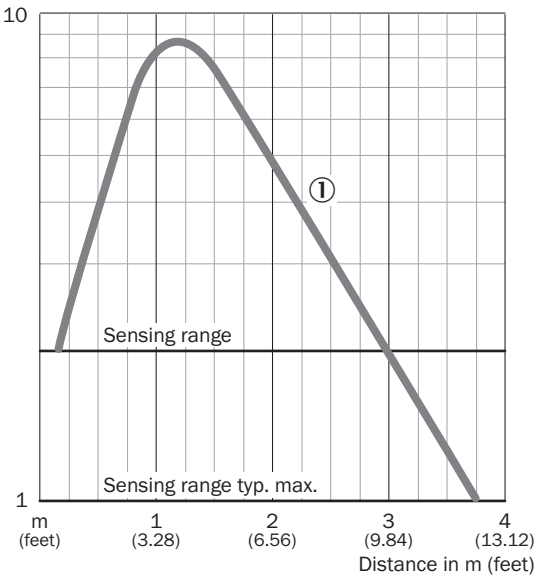

## SENSING RANGE DIAGRAM

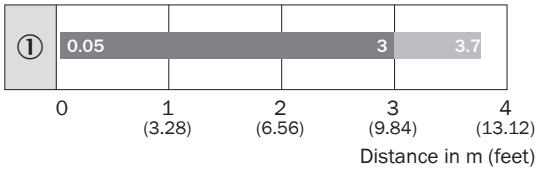


Operating range  Scanning range typ. max.

① Reflector type C110

## DIMENSIONAL DRAWING

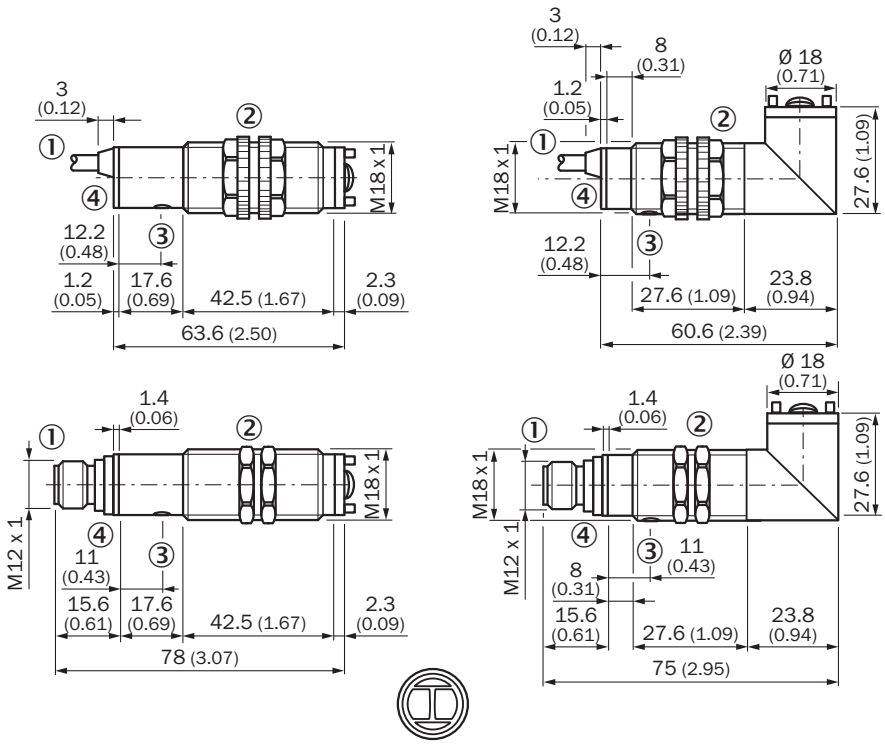


Dimensions in mm (inch)
① Connecting cable or connector
② Fastening nut, 22 mm hex, made of plastic for equipment with plastic housing
② Fastening nut, 24 mm hex, made of metal for equipment with metal housing
③ sensitivity control
④ Signal strength indicator, LED, yellow

Further information as well as suitable accessories, example applications and downloads such as CAD dimensional models, operating instructions and software can be found at www.sick.com/6013581

SICK AG
WALDKIRCH
GERMANY
SICK.COM

# SICK AT A GLANCE

SICK is a leading global technology company for intelligent sensors and integrated solutions in industrial automation. Our technologies set benchmarks, making your industrial processes more efficient, safer and more sustainable – both in logistics and manufacturing operations.

SICK combines sensor intelligence with industry expertise and certified consulting services. We provide the ideal foundation for scalable as well as tailor-made automation solutions and create added value along the entire value chain. Our close partnerships with our customers are more than just a promise: Together, we optimize productivity, improve quality, protect health and safety, and help build a sustainable future. All with empathy and trust.

Since 1946, we have been developing innovative technologies with passion and a pioneering spirit. With a global network in around 40 countries, SICK has a global presence and is always close by. The company's headquarters are located in Waldkirch near Freiburg, Germany. Our customers benefit from our understanding of both local and global requirements, which enables us to deliver tailor-made solutions

SICK
Sensor Intelligence