SICK.COM

DATA SHEET

TR4-SBU01CB

TR4 Direct
Non-contact safety switches

SICK Sensor Intelligence

NON-CONTACT SAFETY SWITCHES

TR4-SBU01CB

ORDERING INFORMATION

Type	part no.
TR4-SBU01CB	6070798

Further device versions and accessories at www.sick.com/TR4_Direct

DETAILED TECHNICAL DATA

FEATURES

System part	Sensor with actuator
Sensor principle	RFID
Number of safe outputs	2
Assured switch on distance S_{ao}	25 mm
Assured switch off distance S_{ar}	35 mm
Active sensor surfaces	2
Actuation directions	5
Coding	Uniquely coded

SAFETY-RELATED PARAMETERS

Safety integrity level	SIL 3 (IEC 61508)
Category	Category 4 (EN ISO 13849)
Performance level	PL e (EN ISO 13849)
PFH_D (mean probability of a dangerous failure per hour)	$6.03 * 10^{-10}$
T_M (mission time)	20 years (EN ISO 13849)
Type	Type 4 (EN ISO 14119)
Actuator coding level	High coding level (EN ISO 14119)
Classification in compliance with IEC/EN 60947-5-3	PDF-M
Safe state in the event of a fault	At least one safety-related semiconductor output (OSSD) is in the OFF state.

FUNCTIONS

Safe series connection	With Flexi Loop (with diagnostics) With T-connector (without diagnostics)

INTERFACES

Connection type	Cable with plug M12, 8-pin
Length of cable	0.2 m
Long connecting cable	≤ 200 m
Cable diameter	6.5 mm
Conductor cross section	0.25 mm²
Bend radius (with fixed installation)	> 7 x cable diameter
Bend radius (with moving cable)	> 14 x cable diameter
Cable material	PVC
Conductor material	Copper
Coupling nut material	Nickel-plated brass
Display elements	LEDs
Status display	✓

ELECTRONICS

Protection class	III (EN 50178)
Classification according to cULus	Class 2
Supply voltage V_s	24 V DC (20.4 V DC ... 26.4 V DC)
Power consumption	≤ 50 mA
Type of output	Self-monitoring semiconductor outputs (OSSDs)
Output current	≤ 200 mA
Response time	45 ms [1]
Release time	360 ms [2]
Risk time	≤ 100 ms [3]
Switch-on time	2 s [4]
Electrical life	10×10^6 switching cycles

[1] In a safe series connection, each downstream safety switch increases the system response time. More response times can be found in the operating instructions.

[2] Response time on approach to the enable zone.

[3] Detection time for external faults (e.g., short-circuit or cross-circuit of output signal switching devices). Follow the detailed information in the operating instructions.

[4] After application of the supply voltage to the safety switch.

MECHANICS

Design	Cylindrical
Housing diameter (sensor/actuator)	M18 / M30
Weight	79 g
Housing material	Valox® DR48

AMBIENT DATA

Enclosure rating	IP67 (IEC 60529) IP69K (ISO 20653)
Ambient operating temperature	–25 °C ... +70 °C
Vibration resistance	10 Hz ... 55 Hz, 3.5 mm (IEC 60068-2-6)
Shock resistance	30 g, 11 ms (EN 60068-2-27)

CERTIFICATES

EU declaration of conformity	✓
UK declaration of conformity	✓
ACMA declaration of conformity	✓

China RoHS	✓
cULus certificate	✓
EC-Type-Examination approval	✓

DIMENSIONAL DRAWING

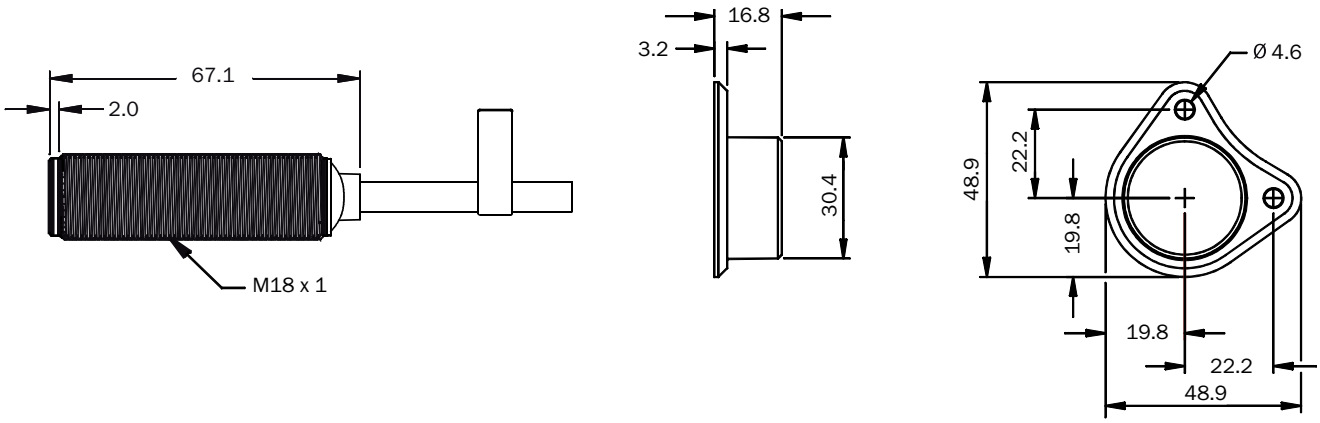

Dimensions in mm (inch)

RESPONSE RANGE

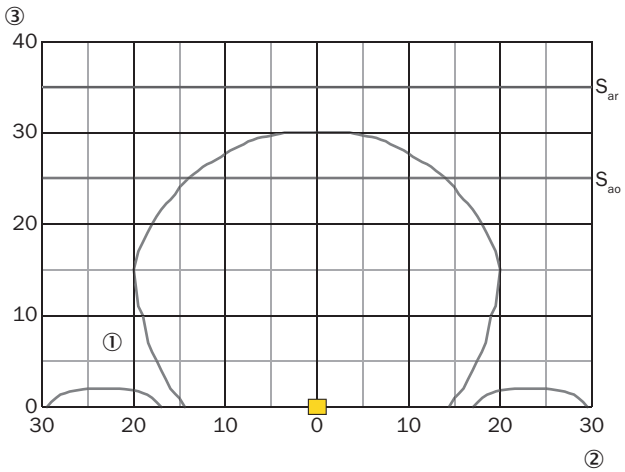

If the actuator moves laterally in relation to the surface of the sensor, a minimum distance of 3 mm must be maintained. This distance will prevent premature triggering due to the side approach areas.
① Sensing range
② side deviation in mm
③ distance to sensor surface

PIN ASSIGNMENT

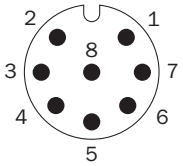

1	Aux output (not safe)
2	Voltage supply 24 V DC
3	Not connected
4	Enable input for OSSD 2
5	OSSD 1
6	OSSD 2
7	Voltage supply 0 V DC
8	Enable input for OSSD 1

CONNECTION SINGLE SENSOR

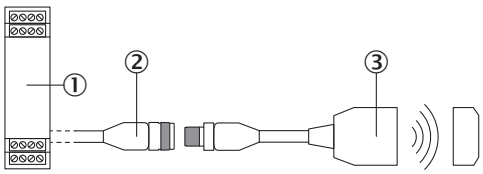

① Safe evaluation unit
② connecting cable with M12 female connector, 8-pin and flying leads (e.g. YF2A18-xxxUA5LEAX)
③ TR4 Direct RFID safety switch (e.g., TR4-Sxx01C)

SERIES CONNECTION WITH T-PIECE (WITHOUT DIAGNOSTICS)

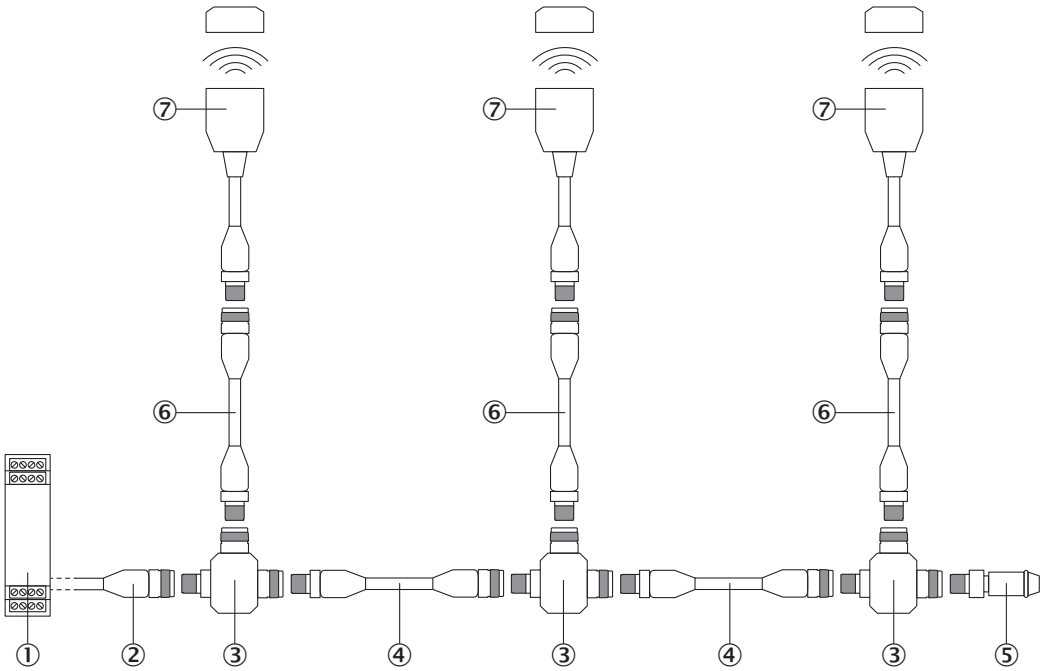

① Safe evaluation unit
② connecting cable with M12 female connector, 4-pin and flying leads (e.g. YF2A14-xxxVB3XLEAX)
③ STR1-XXA T-connector
④ Connection cable with 4-pin, M12 male connector and 4-pin, M12 female connector (e.g., YF2A14-xxxVB3M2A14)
⑤ MLP1-XXT end connector
⑥ Connection cable with 8-pin, M12 male connector and 8-pin, M12 female connector (e.g., YF2A18-xxxUA5M2A18)
⑦ TR4 Direct RFID safety switch (e.g., TR4-Sxx01C)

Further information as well as suitable accessories, example applications and downloads such as CAD dimensional models, operating instructions and software can be found at www.sick.com/6070798

SICK AG
WALDKIRCH
GERMANY
SICK.COM

SICK AT A GLANCE

SICK is a leading global technology company for intelligent sensors and integrated solutions in industrial automation. Our technologies set benchmarks, making your industrial processes more efficient, safer and more sustainable – both in logistics and manufacturing operations.

SICK combines sensor intelligence with industry expertise and certified consulting services. We provide the ideal foundation for scalable as well as tailor-made automation solutions and create added value along the entire value chain. Our close partnerships with our customers are more than just a promise: Together, we optimize productivity, improve quality, protect health and safety, and help build a sustainable future. All with empathy and trust.

Since 1946, we have been developing innovative technologies with passion and a pioneering spirit. With a global network in around 40 countries, SICK has a global presence and is always close by. The company's headquarters are located in Waldkirch near Freiburg, Germany. Our customers benefit from our understanding of both local and global requirements, which enables us to deliver tailor-made solutions

SICK
Sensor Intelligence