SICK.COM

DATA SHEET

DKS40-E5L00360

DKS40
Incremental encoders

SICK Sensor Intelligence

Illustration may differ

INCREMENTAL ENCODERS

DKS40-E5L00360

ORDERING INFORMATION

Type	part no.
DKS40-E5L00360	1036148

Further device versions and accessories at www.sick.com/DKS40

DETAILED TECHNICAL DATA

PERFORMANCE

Pulses per revolution	360
Measuring step	90° electric/pulses per revolution
Measuring step deviation at non binary number of lines	0.07°
Error limits	0.13° [1]

[1] "Non-binary" number of lines: 2n, where n is not a whole number.

INTERFACES

Communication interface	Incremental
Communication Interface detail	HTL / Push pull
Number of signal channels	6-channel
Initialization time	40 ms
Output frequency	≤ 200 kHz
Load current	30 mA
Operating current	≤ 40 mA (without load)

ELECTRICAL DATA

Connection type	Cable, 8-wire, universal, 3 m [1] [2]
Supply voltage	10 ... 30 V
Reference signal, number	1
Reference signal, position	90°, electric, logically gated with A and B

[1] The universal cable connection is positioned so that it is possible to lay it without bends in a radial or axial direction.

[2] No UL certification.

[3] This product is a standard product and does not constitute a safety component as defined in the Machinery Directive. Calculation based on nominal load of components, average ambient temperature 40°C, frequency of use 8760 h/a. All electronic failures are considered hazardous. For more information, see document no. 8015532.

MTTFd: mean time to dangerous failure	600 years (EN ISO 13849-1) [3]

[1] The universal cable connection is positioned so that it is possible to lay it without bends in a radial or axial direction.

[2] No UL certification.

[3] This product is a standard product and does not constitute a safety component as defined in the Machinery Directive. Calculation based on nominal load of components, average ambient temperature 40°C, frequency of use 8760 h/a. All electronic failures are considered hazardous. For more information, see document no. 8015532.

MECHANICAL DATA

Mechanical design	Solid shaft, face mount flange
Shaft diameter	8 mm
Shaft length	13 mm
Weight	+ 0.18 kg
Start up torque	0.6 Ncm (+20 °C)
Operating torque	0.4 Ncm (+20 °C)
Permissible shaft loading radial/axial	40 N (radial) 20 N (axial)
Operating speed	6,000 min^{-1}
Moment of inertia of the rotor	6 gcm^2
Bearing lifetime	2 x 10^9 revolutions
Angular acceleration	≤ 500,000 rad/s^2

AMBIENT DATA

EMC	EN 61000-6-2, EN 61000-6-3
Enclosure rating	IP64
Permissible relative humidity	Condensation of the optical scanning not permitted
Operating temperature range	0 °C ... +60 °C
Storage temperature range	–40 °C ... +70 °C, without package
Resistance to shocks	50 g, 7 ms (EN 60068-2-27)
Resistance to vibration	20 g, 10 Hz ... 2,000 Hz (EN 60068-2-6)

CLASSIFICATIONS

ECl@ss 5.0	27270501
ECl@ss 5.1.4	27270501
ECl@ss 6.0	27270590
ECl@ss 6.2	27270590
ECl@ss 7.0	27270501
ECl@ss 8.0	27270501
ECl@ss 8.1	27270501
ECl@ss 9.0	27270501
ECl@ss 10.0	27270501
ECl@ss 11.0	27270501
ETIM 5.0	EC001486
ETIM 6.0	EC001486
ETIM 7.0	EC001486
UNSPSC 16.0901	41112113

DIMENSIONAL DRAWING FACE MOUNT FLANGE, CABLE

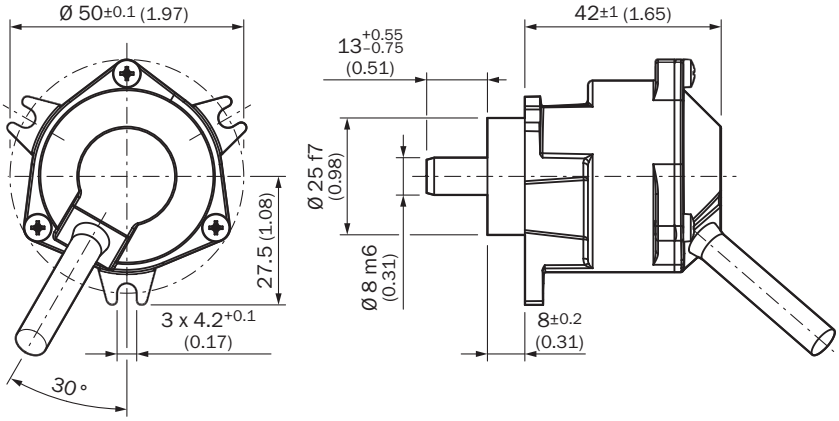

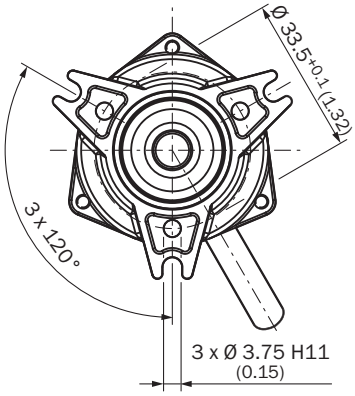

Dimensions in mm (inch)
General tolerances according to DIN ISO 2768-mk

PIN ASSIGNMENT

8-core cable

View of the connector side of housing

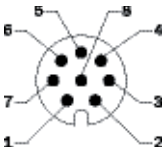

PIN, 8-pole in M12	Color of wires	Signal OC	Signal TTL, HTL	Explanation
1	Brown	Not connected	$\overline{A}$	Signal line
2	White	A	A	Signal line
3	Black	Not connected	$\overline{B}$	Signal line
4	Pink	B	B	Signal line
5	Yellow	Not connected	$\overline{Z}$	Signal line
6	Lilac	Z	Z	Signal line
7	Blue	GND	GND	Ground connection of the encoder
8	Red	$+U_s$	$+U_s$	Supply voltage
Screen	Screen	Screen	Screen	Screen connected to encoder housing. Connect screen on control side.

Further information as well as suitable accessories, example applications and downloads such as CAD dimensional models, operating instructions and software can be found at www.sick.com/1036148

SICK AG
WALDKIRCH
GERMANY
SICK.COM

SICK AT A GLANCE

SICK is a leading global technology company for intelligent sensors and integrated solutions in industrial automation. Our technologies set benchmarks, making your industrial processes more efficient, safer and more sustainable – both in logistics and manufacturing operations.

SICK combines sensor intelligence with industry expertise and certified consulting services. We provide the ideal foundation for scalable as well as tailor-made automation solutions and create added value along the entire value chain. Our close partnerships with our customers are more than just a promise: Together, we optimize productivity, improve quality, protect health and safety, and help build a sustainable future. All with empathy and trust.

Since 1946, we have been developing innovative technologies with passion and a pioneering spirit. With a global network in around 40 countries, SICK has a global presence and is always close by. The company's headquarters are located in Waldkirch near Freiburg, Germany. Our customers benefit from our understanding of both local and global requirements, which enables us to deliver tailor-made solutions

SICK
Sensor Intelligence