SICK.COM

DATA SHEET

WLD4FP-22167130A00

W4
Photoelectric sensors

Sensor Intelligence

Illustration may differ

PHOTOELECTRIC SENSORS

WLD4FP-22167130A00

ORDERING INFORMATION

Type	part no.
WLD4FP-22167130A00	1119990

Further device versions and accessories at www.sick.com/W4

DETAILED TECHNICAL DATA

FEATURES

Functional principle	Photoelectric retro-reflective sensor
Functional principle detail	With minimum distance to reflector (dual lens system)
Sensing range	
Sensing range min.	0 mm
Sensing range max.	4.5 m
Maximum distance range from reflector to sensor (operating reserve 1)	0.015 m ... 4.5 m
Recommended distance range from reflector to sensor (operating reserve 3,75)	0.035 m ... 3.9 m
Reference reflector	Reflector P250
Recommended sensing range for the best performance	0.035 m ... 3.9 m
Polarisation filter	Yes
Emitted beam	
Light source	PinPoint LED
Type of light	Visible red light
Shape of light spot	Point-shaped
Light spot size (distance)	Ø 38 mm (1,000 mm)
Maximum dispersion of the emitted beam around the standardized transmission axis (squint angle)	< +/- 1.5° (at T_U = +23 °C)
Key LED figures	
Normative reference	EN 62471:2008-09 | IEC 62471:2006, modified
LED risk group marking	Free group
Wave length	635 nm
Average service life	100,000 h at T_a = +25 °C
Adjustment	
Teach-in button	BluePilot For sensitivity adjustment
IO-Link	For configuring the sensor parameters and Smart Task functions
Display	
LED blue	BluePilot: Alignment aid
LED green	Operating indicator Static on: power on

LED yellow	Flashing: IO-Link mode Status of received light beam Static on: object not present Static off: object present Flashing: Below the 1.5 function reserve
Special features	Pin2 pre-setting (MF): teach-in via cable

SAFETY-RELATED PARAMETERS

$MTTF_D$	747 years
DC_{avg}	0 %
T_M (mission time)	20 years

COMMUNICATION INTERFACE

IO-Link	✓ , IO-Link V1.1
Data transmission rate	COM2 (38,4 kBaud)
Cycle time	2.3 ms
Process data length	16 Bit
Process data structure	Bit 0 = switching signal Q_{L1} Bit 1 = switching signal Q_{L2} Bit 2 ... 15 = Current receiver level (live)
VendorID	26
DeviceID HEX	0x8002B6
DeviceID DEC	8389302
Compatible master port type	A
SIO mode support	Yes

ELECTRONICS

Supply voltage U_B	10 V DC ... 30 V DC [1]
Ripple	≤ 5 V_{pp}
Usage category	DC-12 (According to EN 60947-5-2) DC-13 (According to EN 60947-5-2)
Current consumption	≤ 20 mA, without load. At U_B = 24 V
Protection class	III
Digital output	
Number	1
Type	Push-pull: PNP/NPN
Switching mode	Dark switching
Signal voltage PNP HIGH/LOW	Approx. U_B-2.5 V / 0 V
Signal voltage NPN HIGH/LOW	Approx. U_B / < 2.5 V
Output current $I_{max.}$	≤ 100 mA
Circuit protection outputs	Reverse polarity protected Overcurrent protected Short-circuit protected
Response time	≤ 500 µs
Repeatability (response time)	150 µs [2]

[1] Limit values.

[2] Signal transit time with resistive load in switching mode.

[3] With light/dark ratio 1:1.

[4] This switching output must not be connected to another output.

Switching frequency	1,000 Hz [3]
Pin/Wire assignment	
Function of pin 4/black (BK)	Digital output, dark switching, object present → output $\bar{Q}_{L1}$ HIGH; IO-Link communication C [4]
Function of pin 4/black (BK) – detail	The pin 4 function of the sensor can be configured Additional possible settings via IO-Link
Function of pin 2/white (WH)	Digital input, teach, HIGH active
Function of pin 2/white (WH) – detail	The pin 2 function of the sensor can be configured Additional possible settings via IO-Link

[1] Limit values.

[2] Signal transit time with resistive load in switching mode.

[3] With light/dark ratio 1:1.

[4] This switching output must not be connected to another output.

MECHANICS

Housing	Rectangular
Design detail	Flat
Dimensions (W x H x D)	16 mm x 40.1 mm x 12.1 mm
Connection	Male connector M8, 4-pin
Material	
Housing	Plastic, VISTAL®
Front screen	Plastic, PMMA
Male connector	Plastic, VISTAL®
Weight	Approx. 30 g
Maximum tightening torque of the fixing screws	0.4 Nm

AMBIENT DATA

Enclosure rating	IP66 (EN 60529) IP67 (EN 60529)
Ambient operating temperature	–40 °C ... +60 °C
Ambient temperature, storage	–40 °C ... +75 °C
Typ. Ambient light immunity	Artificial light: ≤ 50,000 lx Sunlight: ≤ 50,000 lx
Shock resistance	30 g, 11 ms (3 positive and 3 negative shocks along X, Y, Z axes, 18 total shocks (EN60068-2-27))
Vibration resistance	10 Hz ... 1,000 Hz (Amplitude 1 mm, 3 x 30 min (EN60068-2-6))
Air humidity	35 % ... 95 %, relative humidity (no condensation)
Electromagnetic compatibility (EMC)	EN 60947-5-2
Resistance to cleaning agent	ECOLAB
UL File No.	NRKH.E181493 & NRKH7.E181493

SMART TASK

Smart Task name	Base logics
Logic function	Direct AND OR
Timer function	Deactivated Switch-on delay Off delay ON and OFF delay Impulse (one shot)
Inverter	Yes

[1] Use of Smart Task functions without IO-Link communication (SIO mode).

[2] Use of Smart Task functions with IO-Link communication function.

Switching frequency	SIO Logic: 800 Hz [1] IOL: 750 Hz [2]
Response time	SIO Logic: 600 µs [1] IOL: 650 µs [2]
Repeatability	SIO Logic: 200 µs [1] IOL: 250 µs [2]
Switching signal	
Switching signal Q_{L1}	Switching output
Switching signal $\bar{Q}_{L1}$	Switching output

[1] Use of Smart Task functions without IO-Link communication (SIO mode).

[2] Use of Smart Task functions with IO-Link communication function.

DIAGNOSIS

Device temperature	
Measuring range	Very cold, cold, moderate, warm, hot
Device status	Yes
Detailed device status	Yes
Operating hour counter	Yes
Operating hours counter with reset function	Yes
Quality of teach	Yes
Quality of run	Yes, Contamination display

CERTIFICATES

EU declaration of conformity	✓
UK declaration of conformity	✓
ACMA declaration of conformity	✓
Moroccan declaration of conformity	✓
China RoHS	✓
China Compulsory Product Certification (CCC) exempt	✓
ECOLAB certificate	✓
cULus certificate	✓
IO-Link certificate	✓
Photobiological safety (DIN EN 62471) certificate	✓
Information according to Art. 3 of Data Act (Regulation EU 2023/2854)	✓

DISPLAY AND ADJUSTMENT ELEMENTS

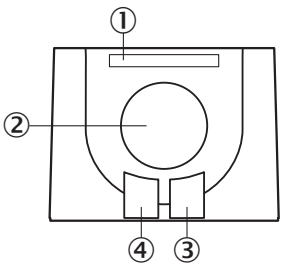

① LED blue
② Teach-in button
③ LED yellow
④ LED green

CONNECTION TYPE MALE CONNECTOR M8, 4-PIN

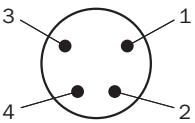

CONNECTION DIAGRAM CD-510

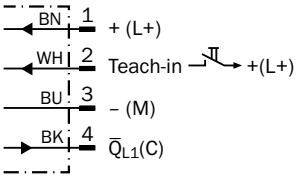

TRUTH TABLE PUSH-PULL: PNP/NPN – DARK SWITCHING Q̄

	Dark switching Q̄ (normally open (upper switch), normally closed (lower switch))	
	Object not present ➜ Output LOW	Object present ➜ Output HIGH
Light receive	✓	✗
Light receive indicator	●	✗
Load resistance to L+	⚠	✗
Load resistance to M	✗	⚠
	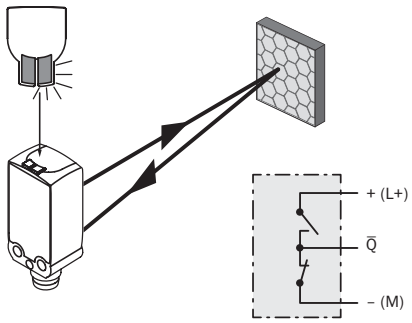	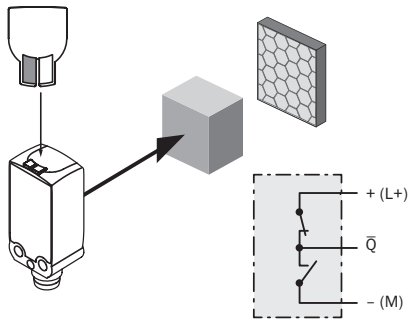

TRUTH TABLE PUSH-PULL: PNP/NPN - LIGHT SWITCHING Q

	Light switching Q (normally closed (upper switch), normally open (lower switch))	
	Object not present ➜ Output HIGH	Object present ➜ Output LOW
Light receive	✓	✗
Light receive indicator	●	✗
Load resistance to L+	✗	⚠
Load resistance to M	⚠	✗
	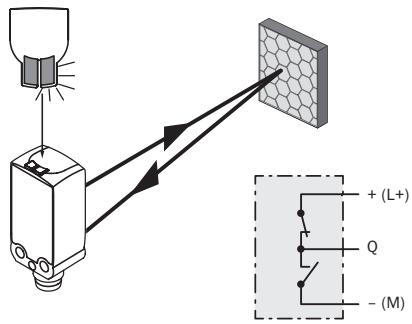	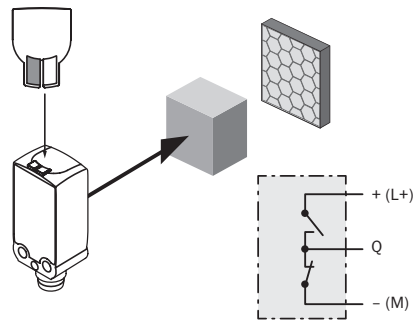

CHARACTERISTIC CURVE STANDARD REFLECTORS

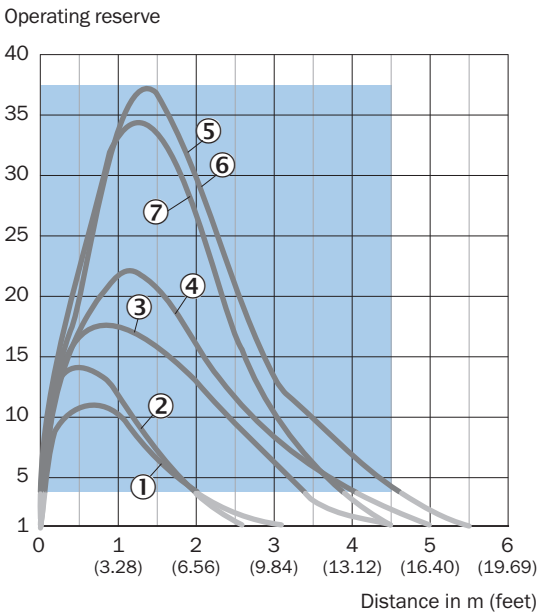

Recommended sensing range for the best performance

① Reflector PL22
② Reflector PL20A
③ Reflector PL30A
④ Reflector PL40A
⑤ Reflector PL80A
⑥ Reflector C110A
⑦ Reflector P250

CHARACTERISTIC CURVE REFLECTIVE TAPE

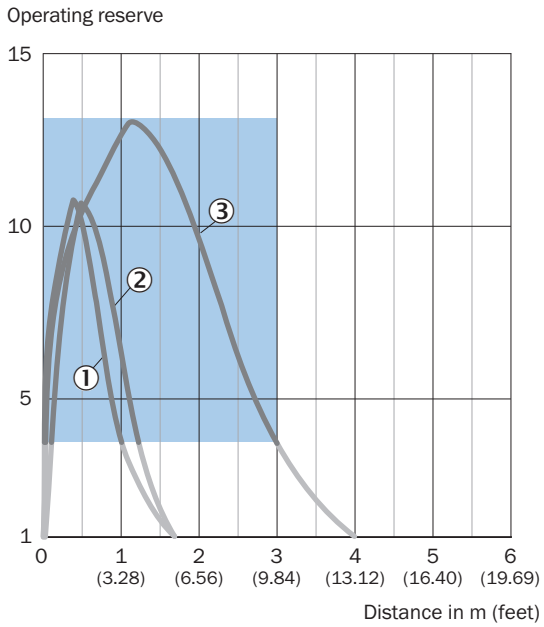

Recommended sensing range for the best performance

① Reflective tape REF-DG
② reflective tape REF-IRF-56
③ Reflective tape REF-AC1000

CHARACTERISTIC CURVE FINE TRIPLE REFLECTORS

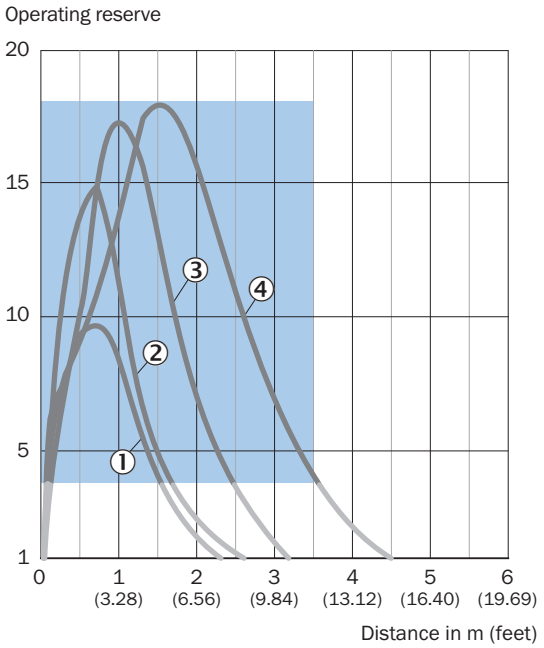

Recommended sensing range for the best performance

① PL10FH reflector
② PL10F reflector
③ Reflector PL20F
④ Reflector P250F

CHARACTERISTIC CURVE CHEMICAL-RESISTANT REFLECTORS

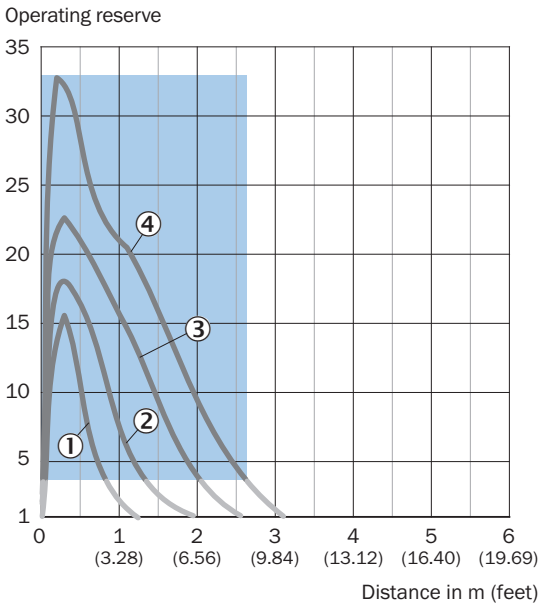

Recommended sensing range for the best performance

① PL10F CHEM reflector
② Reflector PL20 CHEM
③ Reflector P250 CHEM
④ Reflector P250H

LIGHT SPOT SIZE

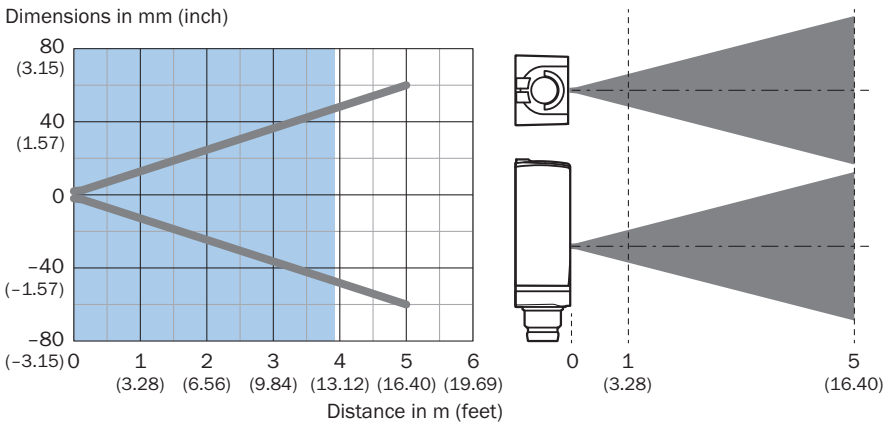

Recommended sensing range for the best performance

SENSING RANGE DIAGRAM STANDARD REFLECTORS

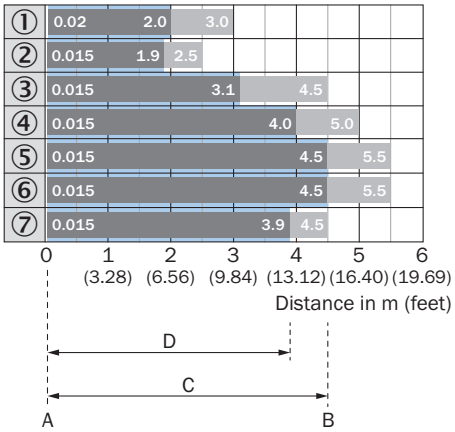

A = Sensing range min. in m
B = Sensing range max. in m
C = Maximum distance range from reflector to sensor (operating reserve 1)
D = Recommended distance range from reflector to sensor (operating reserve 3.75)

Recommended sensing range for the best performance

① Reflector PL22
② Reflector PL20A
③ Reflector PL30A
④ Reflector PL40A
⑤ Reflector PL80A
⑥ Reflector C110A
⑦ Reflector P250

SENSING RANGE DIAGRAM REFLECTIVE TAPE

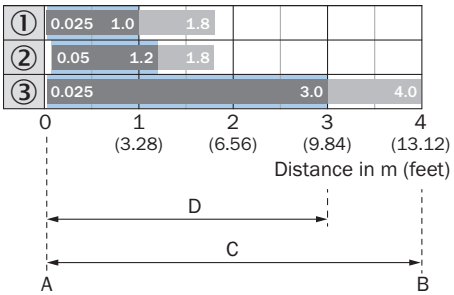

A = Sensing range min. in m
B = Sensing range max. in m
C = Maximum distance range from reflector to sensor (operating reserve 1)
D = Recommended distance range from reflector to sensor (operating reserve 3.75)

Recommended sensing range for the best performance

① Reflective tape REF-DG (50 x 50 mm)
② reflective tape REF-IRF-56
③ Reflective tape REF-AC1000

SENSING RANGE DIAGRAM FINE TRIPLE REFLECTORS

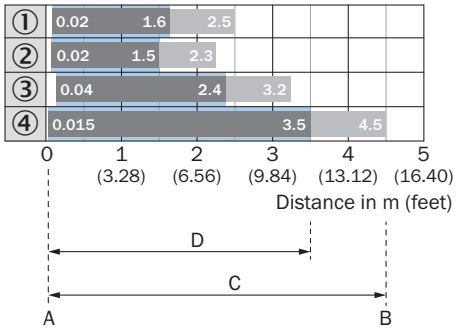

A = Sensing range min. in m
B = Sensing range max. in m
C = Maximum distance range from reflector to sensor (operating reserve 1)
D = Recommended distance range from reflector to sensor (operating reserve 3.75)

Recommended sensing range for the best performance

① PL10FH reflector
② PL10F reflector
③ Reflector PL20F
④ Reflector P250F

SENSING RANGE DIAGRAM CHEMICAL-RESISTANT REFLECTORS

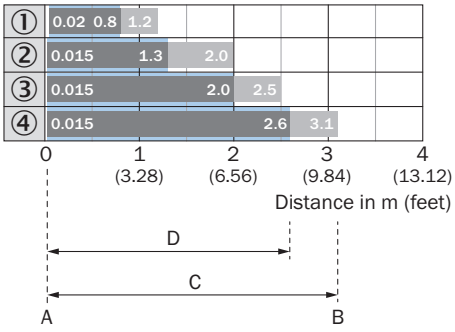

A = Sensing range min. in m
B = Sensing range max. in m
C = Maximum distance range from reflector to sensor (operating reserve 1)
D = Recommended distance range from reflector to sensor (operating reserve 3.75)

Recommended sensing range for the best performance

① PL10F CHEM reflector
② Reflector PL20 CHEM
③ Reflector P250 CHEM
④ Reflector P250H

DIMENSIONAL DRAWING

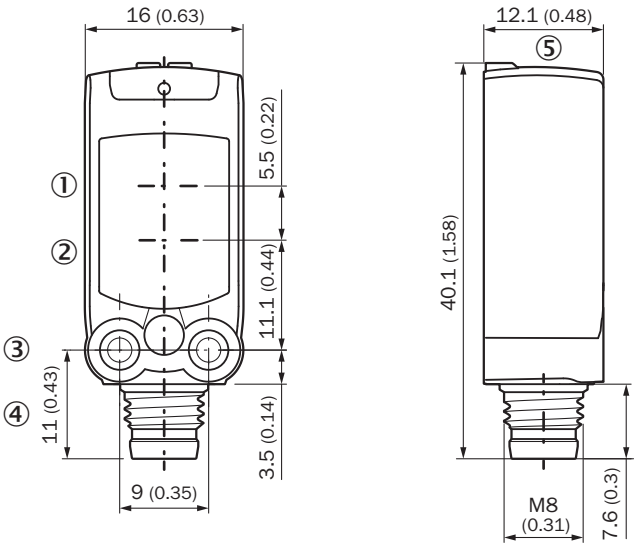

Dimensions in mm (inch)
① Center of optical axis, sender
② Center of optical axis, receiver
③ M3 mounting hole
④ Connection
⑤ display and adjustment elements

Further information as well as suitable accessories, example applications and downloads such as CAD dimensional models, operating instructions and software can be found at www.sick.com/1119990

SICK AG
WALDKIRCH
GERMANY
SICK.COM

SICK AT A GLANCE

SICK is a leading global technology company for intelligent sensors and integrated solutions in industrial automation. Our technologies set benchmarks, making your industrial processes more efficient, safer and more sustainable – both in logistics and manufacturing operations.

SICK combines sensor intelligence with industry expertise and certified consulting services. We provide the ideal foundation for scalable as well as tailor-made automation solutions and create added value along the entire value chain. Our close partnerships with our customers are more than just a promise: Together, we optimize productivity, improve quality, protect health and safety, and help build a sustainable future. All with empathy and trust.

Since 1946, we have been developing innovative technologies with passion and a pioneering spirit. With a global network in around 40 countries, SICK has a global presence and is always close by. The company's headquarters are located in Waldkirch near Freiburg, Germany. Our customers benefit from our understanding of both local and global requirements, which enables us to deliver tailor-made solutions

SICK
Sensor Intelligence