SICK.COM



DATA SHEET

M4C-SA0250LA10, M4C-EA02500A10

deTem
Safety multibeam sensors

SICK Sensor Intelligence



Illustration may differ

SAFETY MULTIBEAM SENSORS

M4C-SA0250LA10, M4C-EA02500A10

ORDERING INFORMATION

System part	Type	part no.
sender	M4C-SA0250LA10	1082684
receiver	M4C-EA02500A10	1082686

Further device versions and accessories at www.sick.com/deTem

DETAILED TECHNICAL DATA

FEATURES

Product version	deTem4 Core
Application	Normal industrial environment
Functional principle	Sender/receiver
System part	Pair
Scanning range category	Low scanning range
Scanning range	17 m
Dimension of the light path	
Minimum	0.5 m ... 15 m
Typical	0.5 m ... 17 m
Number of beams	2
Beam separation	500 mm
Response time	20 ms
Synchronization	Optical synchronization
Items supplied	Sender Receiver Safety instruction Mounting instructions Operating instructions for download

SAFETY-RELATED PARAMETERS

Type	Type 4 (IEC 61496-1)
Safety integrity level	SIL 3 (IEC 61508)
Category	Category 4 (ISO 13849-1)
Performance level	PL e (ISO 13849-1)
PFH_D (mean probability of a dangerous failure per hour)	3×10^{-9}
T_M (mission time)	20 years (ISO 13849-1)
Safe state in the event of a fault	At least one OSSD is in the OFF state.

INTERFACES

System connection	Plug, M12, 5-pin
Flexi Loop compatible M12 male connector	✓
Permitted cable length	50 m
Display elements	LEDs

ELECTRONICS

Protection class	III (IEC 61140) [1]
Supply voltage V_S	24 V DC (19.2 V DC ... 28.8 V DC) [2]
Residual ripple	≤ 10 % [3]
Output signal switching devices (OSSDs)	2 PNP semiconductors, short-circuit protected, cross-circuit monitored [4]
ON state, switching voltage HIGH	24 V DC (V_S – 2.25 V DC ... V_S)
OFF state, switching voltage LOW	≤ 2 V DC
Current-carrying capacity per OSSD	≤ 300 mA

[1] SELV/PELV safety/protective extra-low voltage.

[2] The external voltage supply must be capable of buffering brief mains voltage failures of 20 ms as specified in EN 60204-1. Suitable power supplies are available as accessories from SICK.

[3] Within the limits of V_S.

[4] Applies to the voltage range between –30 V and +30 V.

MECHANICS

Dimensions	See dimensional drawing
Housing cross-section	31 mm x 34 mm
Material	
Housing	Aluminum extruded profile
Front screen	Polycarbonate, scratch-resistant coating
Weight	± 50 g
Cable bend radius	
Stationary position	> 12 x cable diameter
Flexible use	> 15 x cable diameter

AMBIENT DATA

Enclosure rating	IP65 (IEC 60529) IP67 (IEC 60529)
Ambient operating temperature	–30 °C ... +55 °C
Storage temperature	–30 °C ... +70 °C
Air humidity	15 % ... 95 %, Non-condensing
Vibration resistance	5 ... 150 Hz, 3,5 mm / 1 g (EN 60068-2-6)
Shock resistance	15 g / 6 ms (EN 60068-2-27)
Class	3M4 (IEC TR 60721-4-3)

OTHER INFORMATION

Type of light	Near-infrared (NIR), invisible

DIMENSIONAL DRAWING

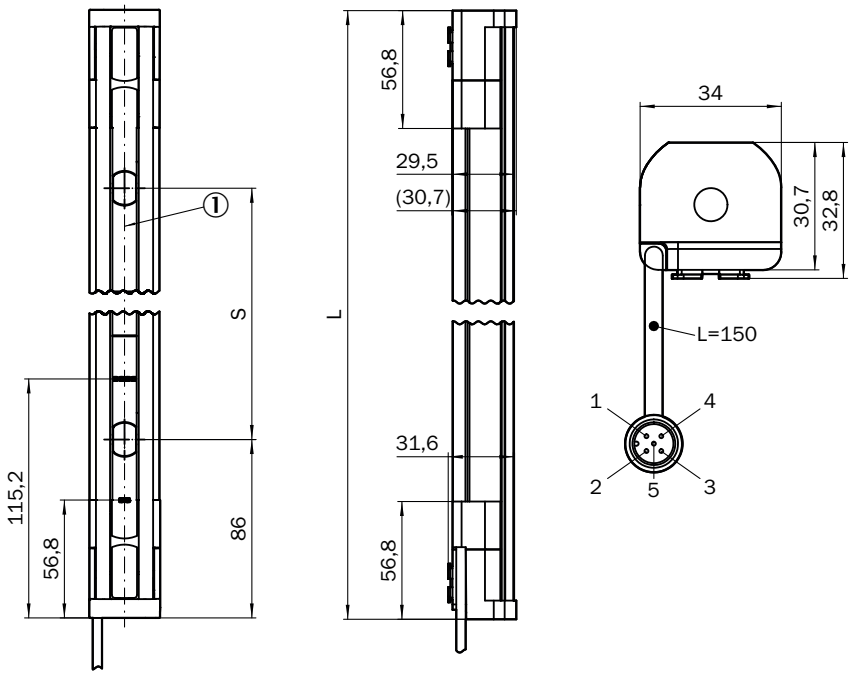

Dimensions in mm (inch)
① Optical axis

Number of beams	Beam separation S	Length L
2	500 (19.69)	672 (26.46)
3	400 (15.75)	972 (38.27)
4	300 (11.81)	1,072 (42.2)

Further information as well as suitable accessories, example applications and downloads such as CAD dimensional models, operating instructions and software can be found at www.sick.com/1082684

SICK AG
WALDKIRCH
GERMANY
SICK.COM

SICK AT A GLANCE

SICK is a leading global technology company for intelligent sensors and integrated solutions in industrial automation. Our technologies set benchmarks, making your industrial processes more efficient, safer and more sustainable – both in logistics and manufacturing operations.

SICK combines sensor intelligence with industry expertise and certified consulting services. We provide the ideal foundation for scalable as well as tailor-made automation solutions and create added value along the entire value chain. Our close partnerships with our customers are more than just a promise: Together, we optimize productivity, improve quality, protect health and safety, and help build a sustainable future. All with empathy and trust.

Since 1946, we have been developing innovative technologies with passion and a pioneering spirit. With a global network in around 40 countries, SICK has a global presence and is always close by. The company's headquarters are located in Waldkirch near Freiburg, Germany. Our customers benefit from our understanding of both local and global requirements, which enables us to deliver tailor-made solutions

SICK

Sensor Intelligence