SICK.COM

DATA SHEET

KUP-0810-S

Shaft couplings
Shaft adaptation

SICK Sensor Intelligence

SHAFT ADAPTATION

KUP-0810-S

ORDERING INFORMATION

Type	part no.
KUP-0810-S	5314178

Further device versions and accessories at www.sick.com/Shaft_couplings

DETAILED TECHNICAL DATA

FEATURES

Product segment	Shaft adaptation
Product	Shaft couplings
Shaft diameter D1	8 mm
Shaft diameter D2	10 mm
Length	24 mm
Maximumspeed	10,000 min^{-1}
Max. torque	80 Ncm
Description	Bar coupling, shaft diameter 8 mm / 10 mm, max. shaft offset: radial ± 0,3 mm, axial ± 0,3 mm, angular ± 3°; max. speed 10.000 rpm, –10° to +80 °C, max. torque: 80 Ncm, material: fiber-glass reinforced polyamide, aluminum hub

DIMENSIONAL DRAWING

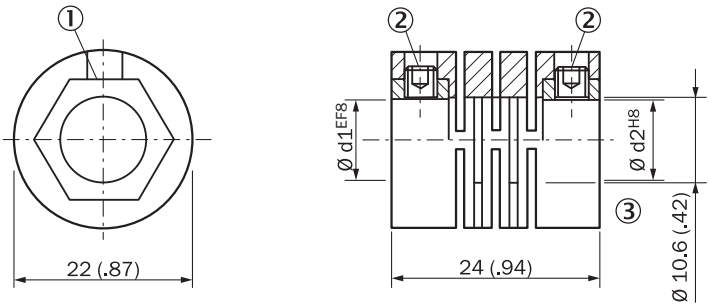

Dimensions in mm (inch)

Further information as well as suitable accessories, example applications and downloads such as CAD dimensional models, operating instructions and software can be found at www.sick.com/5314178

SICK AG
WALDKIRCH
GERMANY
SICK.COM

SICK AT A GLANCE

SICK is a leading global technology company for intelligent sensors and integrated solutions in industrial automation. Our technologies set benchmarks, making your industrial processes more efficient, safer and more sustainable – both in logistics and manufacturing operations.

SICK combines sensor intelligence with industry expertise and certified consulting services. We provide the ideal foundation for scalable as well as tailor-made automation solutions and create added value along the entire value chain. Our close partnerships with our customers are more than just a promise: Together, we optimize productivity, improve quality, protect health and safety, and help build a sustainable future. All with empathy and trust.

Since 1946, we have been developing innovative technologies with passion and a pioneering spirit. With a global network in around 40 countries, SICK has a global presence and is always close by. The company's headquarters are located in Waldkirch near Freiburg, Germany. Our customers benefit from our understanding of both local and global requirements, which enables us to deliver tailor-made solutions

SICK
Sensor Intelligence