SICK.COM

DATA SHEET

OD2000-2452T15

OD2000
Displacement Sensors

SICK Sensor Intelligence

DISPLACEMENT SENSORS

OD2000-2452T15

ORDERING INFORMATION

Type	part no.
OD2000-2452T15	6074383

Further device versions and accessories at www.sick.com/OD2000

DETAILED TECHNICAL DATA

FEATURES

Measuring range	70 mm ... 420 mm [1]
Repeatability	10 µm [2] [3] [4]
Linearity	± 350 µm [2] [4] [5]
Response time	≥ 0.533 ms [6]
Measuring frequency	≤ 7.5 kHz
Output time	≥ 0.1333 ms
Emitted beam	
Light source	Laser, red
Typ. light spot size (distance)	Ø 500 µm (245 mm)
Key laser figures	
Normative reference	IEC 60825-1:2014, EN 60825-1:2014
Laser class	2 [7] [8]
Additional function	Adjustable average value or median filter Switching mode: Distance to Object (DtO) / switching window / object between sensor and background (ObSB) Teach-in of digital output Invertable digital output Teach-in of analog output Invertable analog output

[1] 6 % ... 90 % remission; at default settings.

[2] Measurement on 60 % remission (ceramic, white).

[3] Average value setting: 512, median: 31, measuring frequency: 5 kHz, in the middle of the measuring range, for static measurement.

[4] At T = +25 °C, under constant general conditions.

[5] Observe min. warm-up time of 30 minutes.

[6] Dependent on the set average or sensitivity.

[7] Visible, wavelength: 655 nm, max. average power: 1 mW, max. pulse power: 1 mW, max. pulse duration: 5 ms.

[8] Do not intentionally look into the laser beam. Never point the laser beam at people's eyes.

	Switchable analog output (mA / V) Multifunctional input: sender off/hold functions/deactivated Switch-off display Lock user interface Display can be rotated by 180° Alarm function Edge height jump Time functions (ON/OFF delay, 1 shot) region of interest
Safety-related parameters	
$MTTF_D$	107 years
DC_{avg}	0%

[1] 6 % ... 90 % remission; at default settings.

[2] Measurement on 60 % remission (ceramic, white).

[3] Average value setting: 512, median: 31, measuring frequency: 5 kHz, in the middle of the measuring range, for static measurement.

[4] At T = +25 °C, under constant general conditions.

[5] Observe min. warm-up time of 30 minutes.

[6] Dependent on the set average or sensitivity.

[7] Visible, wavelength: 655 nm, max. average power: 1 mW, max. pulse power: 1 mW, max. pulse duration: 5 ms.

[8] Do not intentionally look into the laser beam. Never point the laser beam at people's eyes.

INTERFACES

IO-Link	✓, IO-Link V1.1
Function	Process data, parameterization, diagnosis, data storage
Data transmission rate	230,4 kbit/s (COM3), Process data length 6 bytes, min. cycle time 0.7 ms
Digital input	In_1 Can be used as sender off, trigger for hold functions, or deactivated
Digital output	
Number	2 [1]
Type	PNP/NPN, selectable
Analog output	
Number	1
Type	Current output / voltage output
Function	Selectable
Current	4 mA ... 20 mA, ≤ 300 Ω
Voltage	0 V ... 10 V, > 10,000 Ω
Resolution	16 bit

[1] PNP/PP: HIGH = UV > 13.5 V/LOW = UV < 8 V; NPN: HIGH = UV < 8 V/LOW = UV > 13.5 V.

ELECTRONICS

Supply voltage U_B	DC 18 V ... 24 V, ± 10%, including residual ripple [1]
Power consumption	1.5 W, At 24 V DC [2]
Warm-up time	< 30 min
Display	OLED display, status LEDs
Enclosure rating	IP67
Protection class	III (EN 50178)
Electrical safety	IEC 61010-1 AMD 1:2016-12
Connection type	Cable with male connector, M12, 5-pin, A-coded, 30 cm

[1] Limit values, reverse-polarity protected.

[2] Without load, at +20 °C.

MECHANICS

Dimensions (W x H x D)	27 mm x 60 mm x 50 mm
Control elements	4 buttons
Housing material	Plastic (PBT)
Window material	Plastic (PMMA)
Weight	90 g

AMBIENT DATA

Ambient temperature, operation	–10 °C ... +50 °C, Operating temperature at V_s = 24 V
Ambient temperature, storage	–20 °C ... +60 °C
Relative air humidity (non-condensing)	35 % ... 85 %
Temperature drift	210 µm/K
Typ. Ambient light immunity	Artificial light: ≤ 3,000 lx [1] Sunlight: ≤ 10,000 lx
Vibration resistance	EN 60068-2-6, EN 60068-2-64
Shock resistance	EN 60068-2-27

[1] With constant object movement in the measuring range.

CERTIFICATES

EU declaration of conformity	✓
UK declaration of conformity	✓
ACMA declaration of conformity	✓
Moroccan declaration of conformity	✓
China RoHS	✓
China Compulsory Product Certification (CCC) exempt	✓
Information according to Art. 3 of Data Act (Regulation EU 2023/2854)	✓

INTERFERENCE DIAGRAM

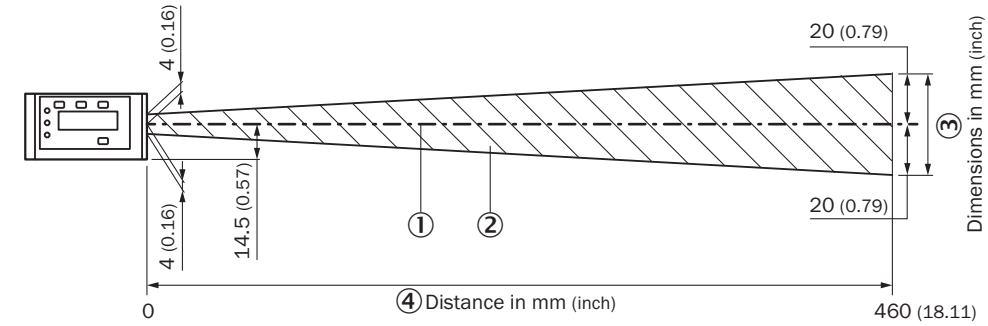

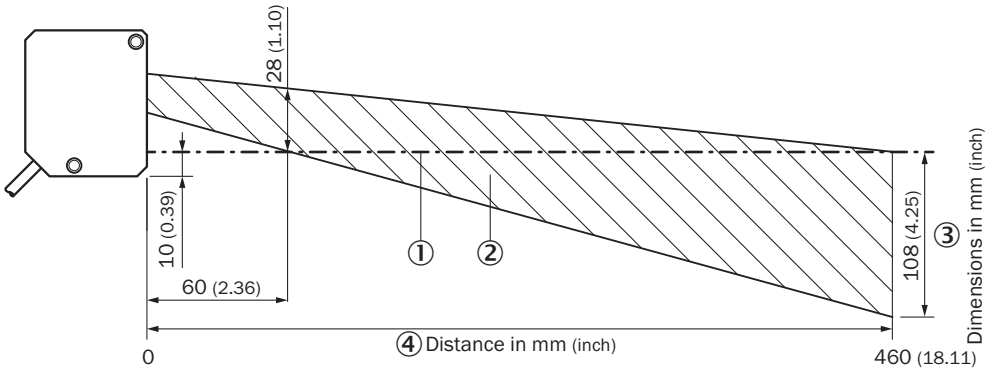

Dimensions in mm (inch)
① Optical axis sender and receiver
② Interference diagram
③ dimensions in mm (inch)
④ Distance in mm

DIMENSIONAL DRAWING

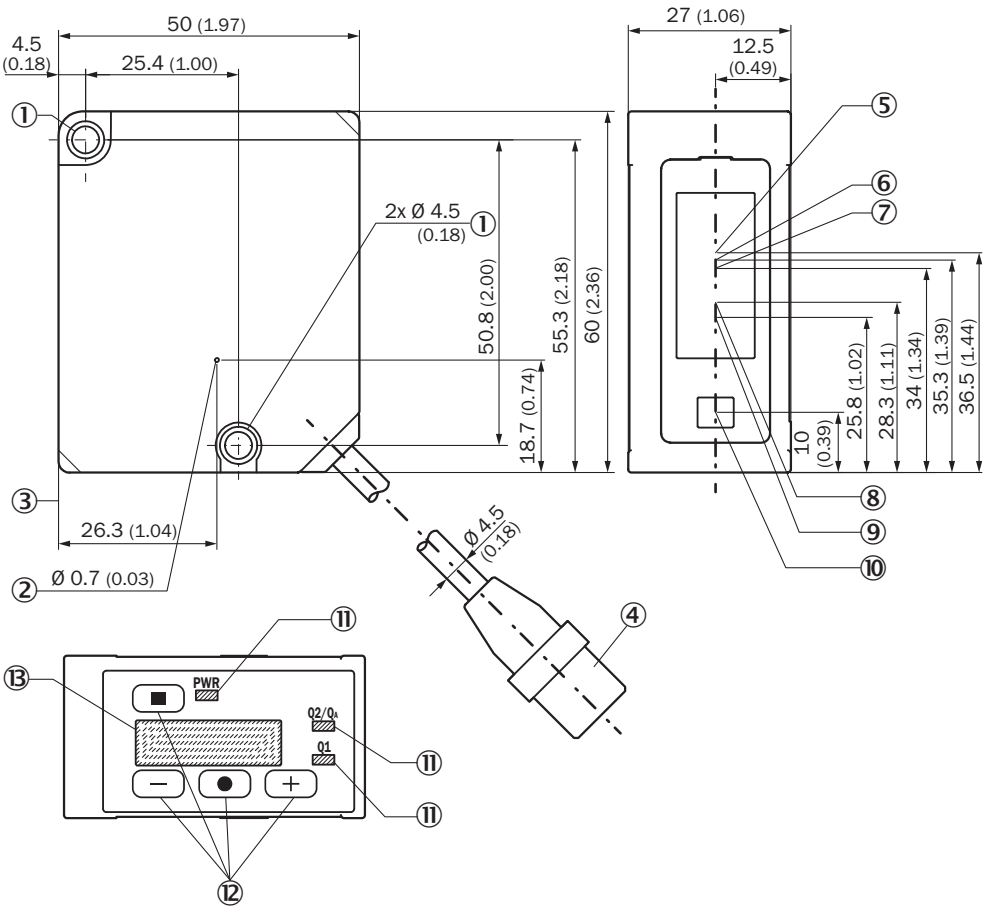

Dimensions in mm (inch)
structure and device dimensions, unit: mm (inch), decimal separator: period
① M4 fixing holes
② Ventilation opening (do not cover)
③ Device zero point (distance = 0 mm)
④ Device cable (length: 300 mm) with male connector, M12, 5-pin, A-coded
⑤ Center of optical axis, receiver (device type OD2000-350, OD2000-700)
⑥ Center of optical axis, receiver (device type OD2000-245)
⑦ Center of optical axis, receiver (device type OD2000-130)
⑧ Center of optical axis, receiver (device type OD2000-050)
⑨ Center of optical axis, receiver (device type OD2000-030)
⑩ Center of optical axis, sender
⑪ status LEDs
⑫ Control elements
⑬ Display

CONNECTION DIAGRAM

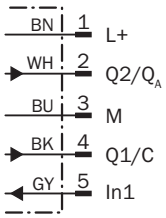

① Brown
② White
③ blue
④ Black
⑤ Gray

LIGHT SPOT SIZE TYPICAL LIGHT SPOT SIZE OD2000-245XXXX

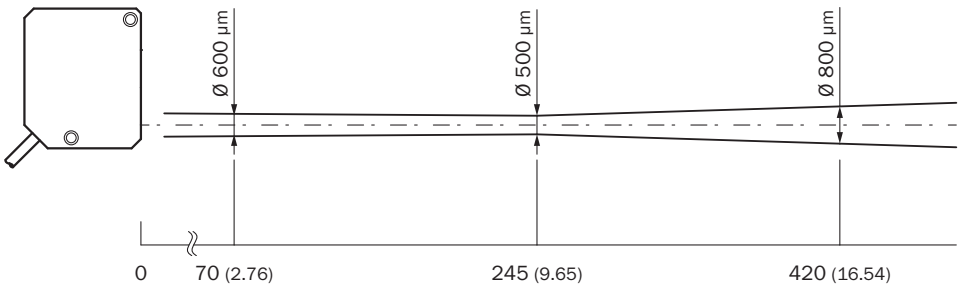

Unit: mm (inch), decimal separator: period

LINEARITY

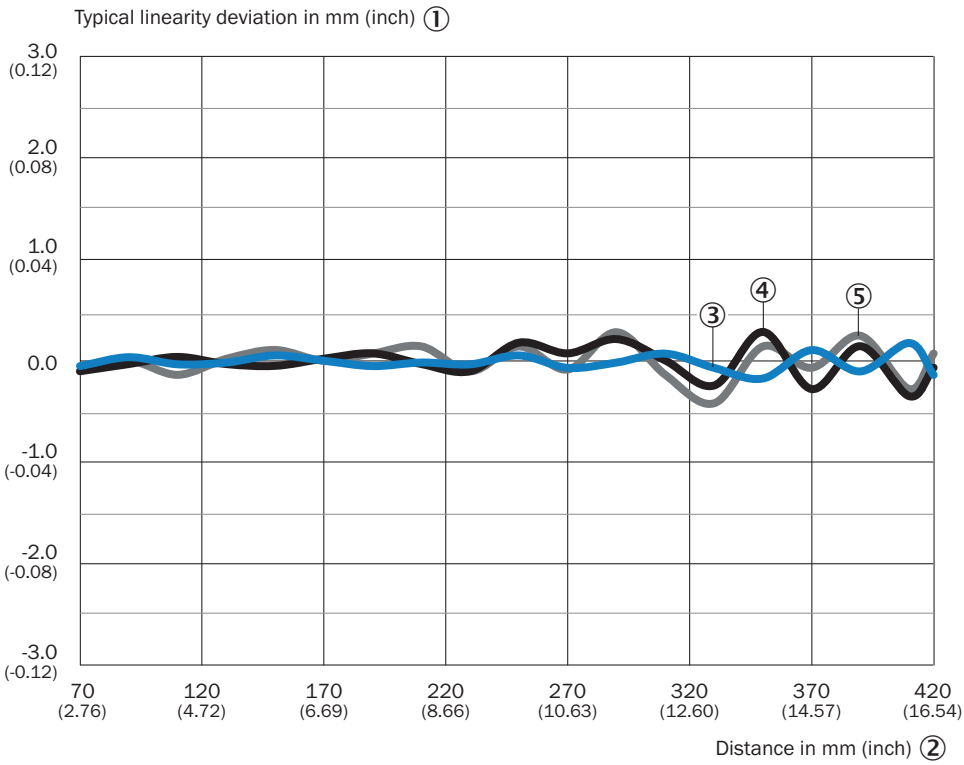

① Typical linearity deviation in mm (inch)
② Distance in mm (inch)
③ White 60% remission factor
④ Black 9.5% remission factor
⑤ stainless steel

Further information as well as suitable accessories, example applications and downloads such as CAD dimensional models, operating instructions and software can be found at www.sick.com/6074383

SICK AG
WALDKIRCH
GERMANY
SICK.COM

SICK AT A GLANCE

SICK is a leading global technology company for intelligent sensors and integrated solutions in industrial automation. Our technologies set benchmarks, making your industrial processes more efficient, safer and more sustainable – both in logistics and manufacturing operations.

SICK combines sensor intelligence with industry expertise and certified consulting services. We provide the ideal foundation for scalable as well as tailor-made automation solutions and create added value along the entire value chain. Our close partnerships with our customers are more than just a promise: Together, we optimize productivity, improve quality, protect health and safety, and help build a sustainable future. All with empathy and trust.

Since 1946, we have been developing innovative technologies with passion and a pioneering spirit. With a global network in around 40 countries, SICK has a global presence and is always close by. The company's headquarters are located in Waldkirch near Freiburg, Germany. Our customers benefit from our understanding of both local and global requirements, which enables us to deliver tailor-made solutions

SICK
Sensor Intelligence