SICK.COM

DATA SHEET

WTM12L-34161820A00

W12
Photoelectric sensors

SICK Sensor Intelligence

Illustration may differ

PHOTOELECTRIC SENSORS

WTM12L-34161820A00

ORDERING INFORMATION

Type	part no.
WTM12L-34161820A00	1126054

Further device versions and accessories at www.sick.com/W12

DETAILED TECHNICAL DATA

FEATURES

Functional principle	Photoelectric proximity sensor
Functional principle detail	Background suppression, Foreground suppression, MultiMode, distance value
MultiMode	1 Background suppression (factory setting) 2 Foreground suppression 3 Two Value Teach-in 4 Two independent switching points 5 Window Mode 6 ApplicationSelect

[1] 90% remission factor.

[2] Equivalent to 1 σ.

[3] See repeatability characteristic lines.

[4] Do not intentionally look into the laser beam. Never point the laser beam at people's eyes.

	M manual / measurement
Sensing range	
Sensing range min.	15 mm (mode 1, 3, 4, 5) 0 mm (mode 2) 15 mm (mode 1 and 6 combined)
Sensing range max.	420 mm (mode 1, 3, 4, 5) 150 mm (mode 2) 650 mm (mode 1 and 6 combined)
Adjustable switching threshold for background suppression	30 mm ... 420 mm (mode 1, 3, 4, 5) 30 mm ... 650 mm (mode 1 and 6 combined)
Adjustable switching threshold for foreground suppression	35 mm ... 150 mm (mode 2)
Reference object	Object with 90% remission factor (complies with standard white according to DIN 5033)
Minimum distance between set sensing range and background (black 6% / white 90%)	4 mm, at a distance of 140 mm (mode 1, 3, 4, 5) 3 mm, at a distance of 200 mm (mode 1 and 6 combined)
Minimum object height at set sensing range in front of black background (6% remission factor)	2 mm, at a distance of 90 mm (mode 2)
Recommended sensing range for the best performance	40 mm ... 160 mm (mode 1, 3, 4, 5) 40 mm ... 120 mm (mode 2) 40 mm ... 400 mm (mode 1 and 6 combined)
Distance value	
Measuring range	30 mm ... 420 mm
Repeatability	0,1 mm ... 4 mm [1) 2) 3)]
Accuracy	Typ. 2.0 mm at 30 ... 120 mm distance [1)] Typ. 12 mm at 120 ... 250 mm distance [1)] Typ. 40 mm at 250 ... 400 mm distance [1)]
Distance value output	Via IO-Link
Resolution	0.1 mm
Update rate of the distance value	20 ms
Emitted beam	
Light source	Laser
Type of light	Visible red light
Shape of light spot	Ellipse shape
Light spot size (distance)	2.4 mm x 1 mm (160 mm)
Maximum dispersion of the emitted beam around the standardized transmission axis (squint angle)	< +/- 1.0° (at T_U = +23 °C)
Focus position	800 mm
Key laser figures	
Normative reference	EN 60825-1:2014, IEC 60825-1:2014
Laser class	1 [4)]
Wave length	655 nm
Pulse duration	4 µs
Maximum pulse power	< 4.03 mW
Average service life	50,000 h at T_U = +25 °C
Smallest detectable object (MDO) typ.	
	3 mm, at 160 mm distance, mode 1, 3, 4, 5 2.8 mm, at a distance of 120 mm, mode 2 2.5 mm, at a distance of 200 mm, mode 1 and 6 combined Object with 90% remission factor (complies with standard white according to DIN 5033)
Adjustment	
Teach-Turn adjustment	BluePilot For adjusting the sensing range with mode selection

[1)] 90% remission factor.

[2)] Equivalent to 1 σ.

[3)] See repeatability characteristic lines.

[4)] Do not intentionally look into the laser beam. Never point the laser beam at people's eyes.

IO-Link	For configuring the sensor parameters and Smart Task functions
Display	
LED blue	BluePilot: Display of mode, display of output states Q_{L1} (LED 3 permanently on) and Q_{L2} (LED 5 permanently on)
LED green	Operating indicator Static on: power on Flashing: IO-Link mode
LED yellow	Status of received light beam Static on: object present Static off: object not present
Special features	MultiMode
Special applications	Detecting small objects, Detection of objects moving at high speeds, Detecting flat objects, Detecting uneven, shiny objects, Detection of poorly remitting and tilted objects, Detecting perforated objects

[1] 90% remission factor.

[2] Equivalent to 1 σ.

[3] See repeatability characteristic lines.

[4] Do not intentionally look into the laser beam. Never point the laser beam at people's eyes.

SAFETY-RELATED PARAMETERS

$MTTF_D$	280 years
DC_{avg}	0 %
T_M (mission time)	10 years

COMMUNICATION INTERFACE

IO-Link	✓ , IO-Link V1.1
Data transmission rate	COM2 (38,4 kBaud)
Cycle time	2.3 ms
Process data length	16 Bit
Process data structure	Bit 0 = switching signal Q_{L1} Bit 1 = switching signal Q_{L2} Bit 2 ... 15 = Current receiver level (live)
VendorID	26
DeviceID HEX	0x8002D2
DeviceID DEC	8389330
Compatible master port type	A
SIO mode support	Yes

ELECTRONICS

Supply voltage U_B	10 V DC ... 30 V DC [1]
Ripple	≤ 5 V
Usage category	DC-12 (According to EN 60947-5-2) DC-13 (According to EN 60947-5-2)
Current consumption	≤ 14 mA, without load. At U_B = 24 V

[1] Limit values.

[2] Signal transit time with resistive load in switching mode.

[3] With light/dark ratio 1:1.

[4] This switching output must not be connected to another output.

Protection class	III
Digital output	
Number	2 (Complementary)
Type	Push-pull: PNP/NPN
Switching mode	Light/dark switching
Signal voltage PNP HIGH/LOW	Approx. U_B-2.5 V / 0 V
Signal voltage NPN HIGH/LOW	Approx. U_B / < 2.5 V
Output current $I_{max.}$	≤ 100 mA
Circuit protection outputs	Reverse polarity protected Overcurrent protected Short-circuit protected
Response time	≤ 200 µs (mode 1, 2, 3) [2] ≤ 500 µs (mode 4, 5) [2] ≤ 15 ms (mode 1 and 6 combined) [2]
Repeatability (response time)	85 µs (mode 1, 2, 3) [2] 150 µs (mode 4, 5) [2] 5 ms (mode 1 and 6 combined) [2]
Switching frequency	2,500 Hz (mode 1, 2, 3) [3] 1,000 Hz (mode 4, 5) [3] 30 Hz (mode 1 and 6 combined) [3]
Pin/Wire assignment	
Function of pin 4/black (BK)	Digital output, light switching, object present → output QL1 HIGH (Mode 1, 3, 4, 5, 6) [4] Digital output, dark switching, object present → output Q̄L1 HIGH (Mode 2) [4] IO-Link communication C
Function of pin 4/black (BK) – detail	The pin 4 function of the sensor can be configured Additional possible settings via IO-Link
Function of pin 2/white (WH)	Digital output, dark switching, object present → output Q̄L1 LOW (Mode 1, 3, 5, 6) [4] Digital output, light switching, object present → output QL1 LOW (Mode 2) [4] Digital output, light switching, object present → output QL2 HIGH (Mode 4) [4]
Function of pin 2/white (WH) – detail	The pin 2 function of the sensor can be configured Additional possible settings via IO-Link

[1] Limit values.

[2] Signal transit time with resistive load in switching mode.

[3] With light/dark ratio 1:1.

[4] This switching output must not be connected to another output.

MECHANICS

Housing	Rectangular
Dimensions (W x H x D)	15.6 mm x 49.5 mm x 43.1 mm
Connection	Cable with plug, M12, 4-pin, 315 mm
Connection detail	
Deep-freeze property	Do not bend below 0 °C
Conductor size	0.14 mm²
Cable diameter	Ø 3.4 mm
Length of cable (L)	275 mm
Bending radius	For flexible use > 12 x cable diameter
Bending cycles	1,000,000
Material	
Housing	Metal, zinc diecast
Front screen	Plastic, PMMA
Cable	Plastic, PVC
Male connector	Plastic, VISTAL®
Weight	Approx. 94 g
Maximum tightening torque of the fixing screws	1.4 Nm

AMBIENT DATA

Enclosure rating	IP66 (EN 60529) IP67 (EN 60529) IP69 (EN 60529)
Ambient operating temperature	–20 °C ... +55 °C
Ambient temperature, storage	–40 °C ... +70 °C
Warm-up time	< 15 min, Where T_u is under –10 °C
Typ. Ambient light immunity	Artificial light: ≤ 50,000 lx Sunlight: ≤ 50,000 lx
Shock resistance	50 g, 11 ms (25 positive and 25 negative shocks along X, Y, Z axes, 150 total shocks (EN60068-2-27))
Vibration resistance	10 Hz ... 2,000 Hz (Amplitude 0.5 mm / 10 g, 20 sweeps per axis, for X, Y, Z axes, 1 octave/min, (EN60068-2-6))
Air humidity	35 % ... 95 %, relative humidity (no condensation)
Electromagnetic compatibility (EMC)	EN 60947-5-2
Resistance to cleaning agent	ECOLAB
UL File No.	NRKH.E181493 & NRKH7.E181493

SMART TASK

Smart Task name	Base logics
Logic function	Direct AND OR
Timer function	Deactivated Switch-on delay Off delay ON and OFF delay Impulse (one shot)
Inverter	Yes
Switching frequency	SIO Logic: 2000 Hz (mode 1, 2, 3) [1] SIO Logic: 900 Hz (mode 4, 5) [1] SIO Logic: 30 Hz (mode 1 and 6 combined) [1] IOL: 1600 Hz (mode 1, 2, 3) [2] IOL: 800 Hz (mode 4, 5) [2] IOL: 30 Hz (mode 1 and 6 combined) [2]
Response time	SIO Logic: 250 µs (mode 1, 2, 3) [1] SIO logic: 550 µs (mode 4, 5) [1] SIO Logic: 15 ms (mode 1 and 6 combined) [1] IOL: 300 µs (mode 1, 2, 3) [2] IOL: 600 µs (mode 4, 5) [2] IOL: 15 ms (mode 1 and 6 combined) [2]
Repeatability	SIO Logic: 120 µs (mode 1, 2, 3) [1] SIO Logic: 200 µs (mode 4, 5) [1] SIO Logic: 5 ms (mode 1 and 6 combined) [1] IOL: 150 µs (mode 1, 2, 3) [2] IOL: 250 µs (mode 4, 5) [2] IOL: 5 ms (mode 1 and 6 combined) [2]
Switching signal	
Switching signal Q_{L1}	Switching output
Switching signal $\bar{Q}_{L1}$	Switching output

[1] Use of Smart Task functions without IO-Link communication (SIO mode).

[2] Use of Smart Task functions with IO-Link communication function.

DIAGNOSIS

Device temperature Measuring range	Very cold, cold, moderate, warm, hot
Device status	Yes
Detailed device status	Yes
Operating hour counter	Yes
Operating hours counter with reset function	Yes
Quality of teach	Yes

CERTIFICATES

EU declaration of conformity	✓
UK declaration of conformity	✓
ACMA declaration of conformity	✓
Moroccan declaration of conformity	✓
China RoHS	✓
China Compulsory Product Certification (CCC) exempt	✓
ECOLAB certificate	✓
cULus certificate	✓
IO-Link certificate	✓
Laser safety (IEC 60825-1) declaration of manufacturer	✓
Information according to Art. 3 of Data Act (Regulation EU 2023/2854)	✓

DIMENSIONAL DRAWING, SENSOR

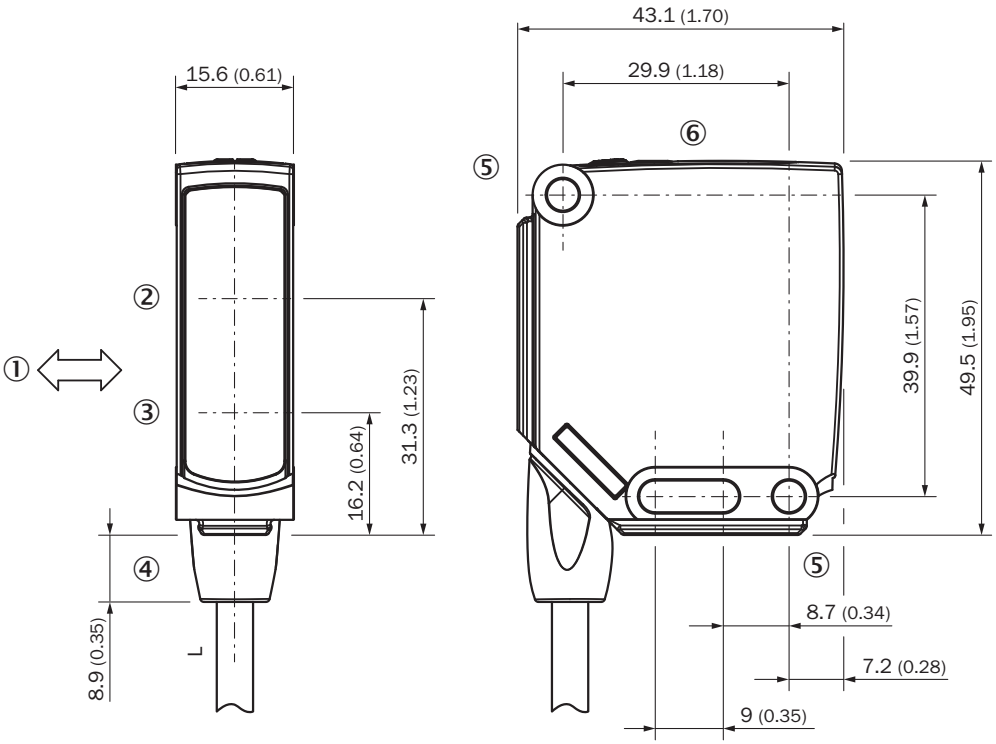

Dimensions in mm (inch)
For length of cable (L), see technical data
① Standard direction of the material being detected
② Center of optical axis, receiver
③ Center of optical axis, sender
④ Connection
⑤ Mounting hole, Ø 4.2 mm
⑥ display and adjustment elements

DIMENSIONAL DRAWING, CONNECTION

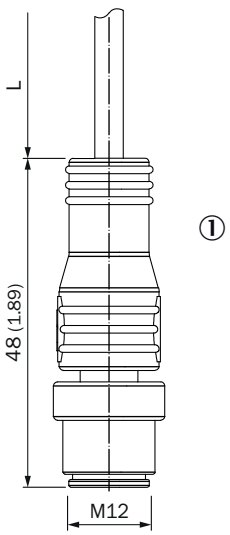

Dimensions in mm (inch)
For length of cable (L), see technical data
① Cable with M12 male connector

DISPLAY AND ADJUSTMENT ELEMENTS

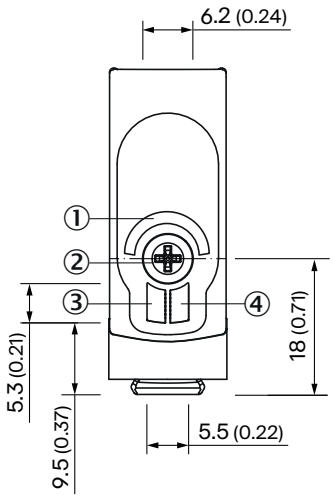

① LED blue
② Teach-Turn adjustment
③ LED green
④ LED yellow

DISPLAY AND SETTING DETAIL

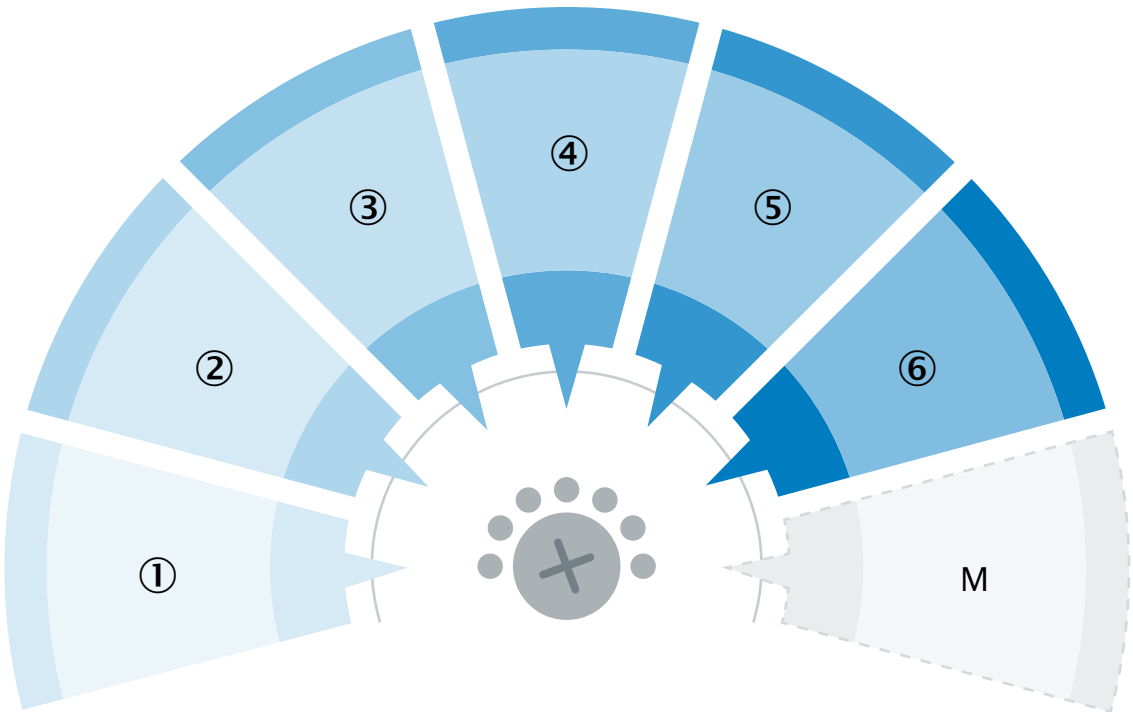

	MultiMode settings
1	Background suppression
2	Foreground suppression
3	Two Value Teach-in
4	Two independent switching points
5	Window Mode
6	ApplicationSelect
M	Manual / measurement

CONNECTION TYPE M12 MALE CONNECTOR, 4-PIN

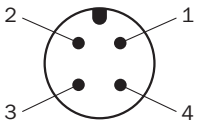

CONNECTION DIAGRAM CD-598 (MODE 1, 2, 3, 5, 6)

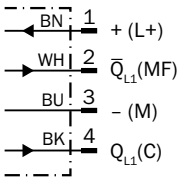

CONNECTION DIAGRAM CD-597 (MODE 4)

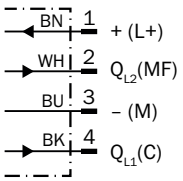

TRUTH TABLE PUSH-PULL: PNP/NPN – DARK SWITCHING $\bar{Q}$L2 (MULTIMODE 4)

	Dark switching $\bar{Q}_{L2}$ (normally closed (upper switch), normally open (lower switch))	
	Object not present ➜ Output HIGH	Object present ➜ Output LOW
Light receive	✗	✓
Light receive indicator	✗	●
Load resistance to L+	✗	⚠
Load resistance to M	⚠	✗
	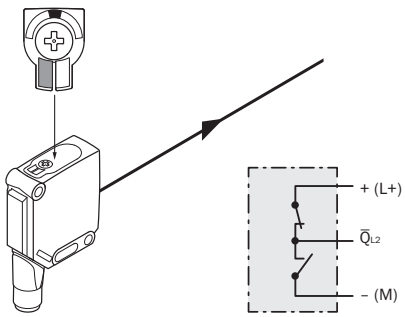	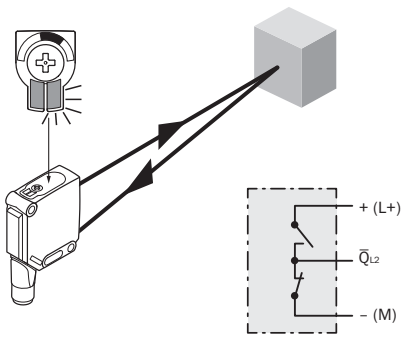

TRUTH TABLE PUSH-PULL: PNP/NPN – LIGHT SWITCHING QL2 (MULTIMODE 4)

	Light switching Q_{L2} (normally open (upper switch), normally closed (lower switch))	
	Object not present ➜ Output LOW	Object present ➜ Output HIGH
Light receive	✗	✓
Light receive indicator	✗	●
Load resistance to L+	⚠	✗
Load resistance to M	✗	⚠
	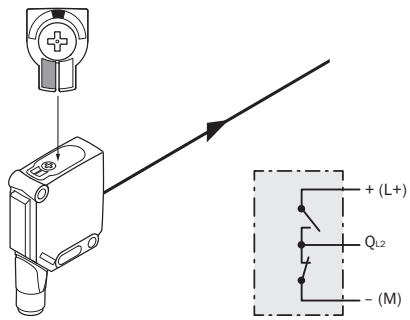	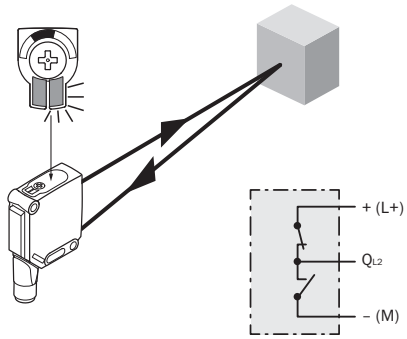

TRUTH TABLE PUSH-PULL: PNP/NPN – DARK SWITCHING $\bar{Q}$L1 (MULTIMODE 4)

	Dark switching $\bar{Q}_{L1}$ (normally closed (upper switch), normally open (lower switch))	
	Object not present ➜ Output HIGH	Object present ➜ Output LOW
Light receive	✗	✓
Light receive indicator	✗	●
Load resistance to L+	✗	⚠
Load resistance to M	⚠	✗
	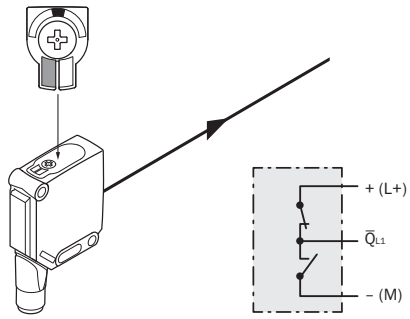	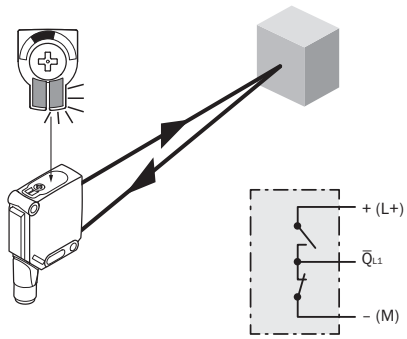

TRUTH TABLE PUSH-PULL: PNP/NPN – LIGHT SWITCHING QL1 (MULTIMODE 4)

	Light switching Q_{L1} (normally open (upper switch), normally closed (lower switch))	
	Object not present ➜ Output LOW	Object present ➜ Output HIGH
Light receive	✗	✓
Light receive indicator	✗	●
Load resistance to L+	⚠	✗
Load resistance to M	✗	⚠
	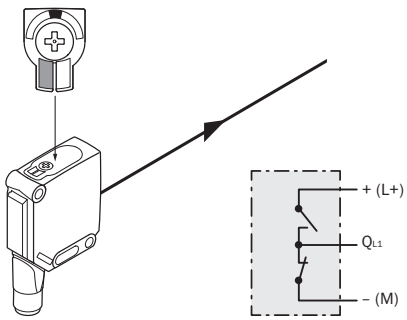	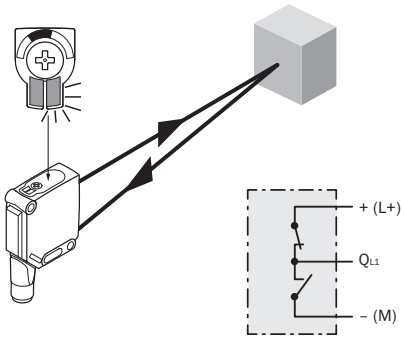

TRUTH TABLE PUSH-PULL: PNP/NPN – DARK SWITCHING $\bar{Q}$ (MULTIMODE 2)

	Dark switching $\bar{Q}$ (normally open (upper switch), normally closed (lower switch))	
	Object not present ➜ Output LOW	Object present ➜ Output HIGH
Light receive	✓	✗
Light receive indicator	●	✗
Load resistance to L+	⚠	✗
Load resistance to M	✗	⚠
	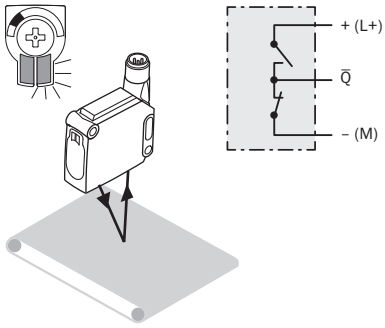	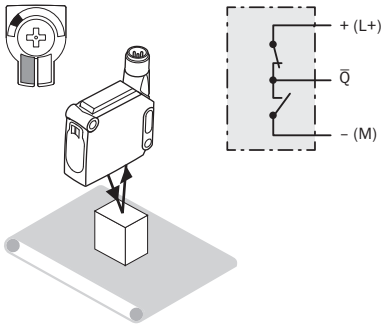

TRUTH TABLE PUSH-PULL: PNP/NPN – LIGHT SWITCHING Q (MULTIMODE 2)

	Light switching Q (normally closed (upper switch), normally open (lower switch))	
	Object not present ➜ Output HIGH	Object present ➜ Output LOW
Light receive	✓	✗
Light receive indicator	●	✗
Load resistance to L+	✗	⚠
Load resistance to M	⚠	✗
	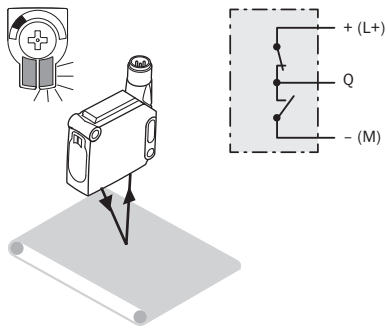	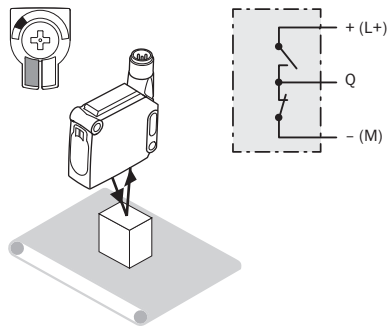

TRUTH TABLE PUSH-PULL: PNP/NPN – LIGHT SWITCHING Q (MULTIMODE 1, 3, 5, 6)

	Light switching Q (normally open (upper switch), normally closed (lower switch))	
	Object not present ➜ Output LOW	Object present ➜ Output HIGH
Light receive	✗	✓
Light receive indicator	✗	●
Load resistance to L+	⚠	✗
Load resistance to M	✗	⚠
	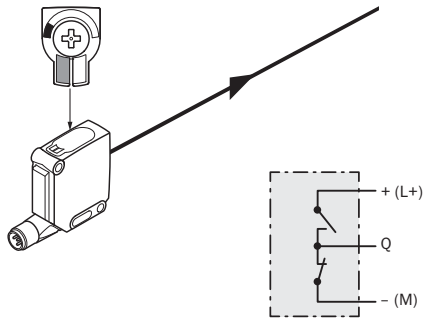	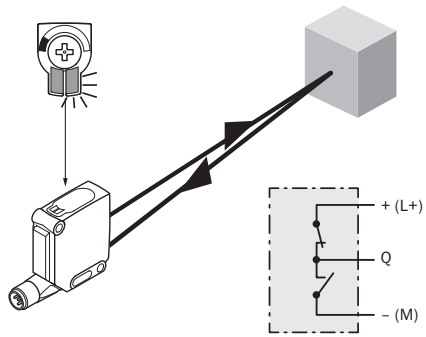

TRUTH TABLE PUSH-PULL: PNP/NPN – DARK SWITCHING Q̄ (MULTIMODE 1, 3, 5, 6)

	Dark switching Q̄ (normally closed (upper switch), normally open (lower switch))	
	Object not present ➜ Output HIGH	Object present ➜ Output LOW
Light receive	✗	✓
Light receive indicator	✗	●
Load resistance to L+	✗	⚠
Load resistance to M	⚠	✗
	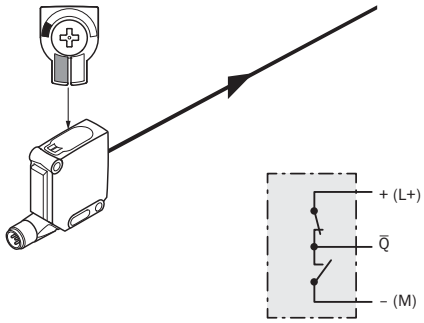	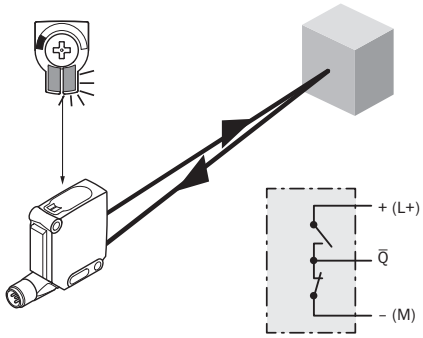

CHARACTERISTIC CURVE MODE 1, 3, 4, 5

Minimum distance in mm (y) between the set sensing range and white background (90 % remission)

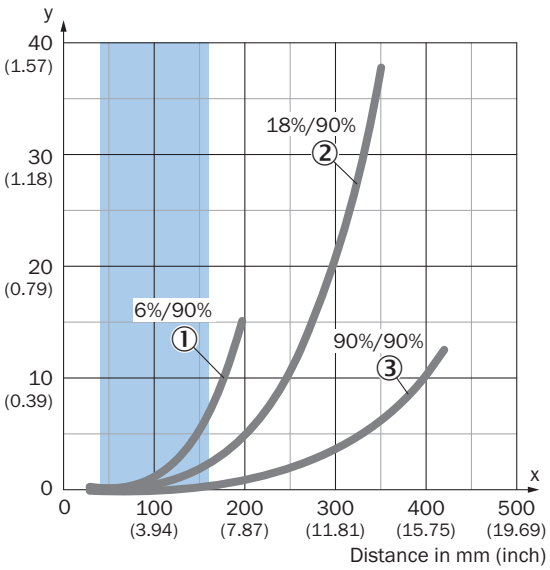

Recommended sensing range for the best performance

① Black object, 6% remission factor
② Gray object, 18% remission factor
③ White object, 90% remission factor

Example:
Safe suppression of the background

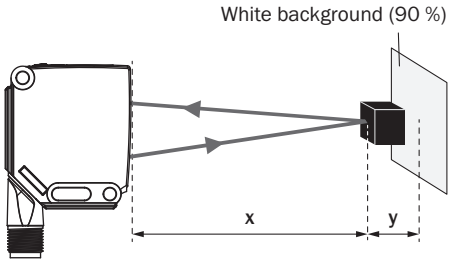

Black object (6 % remission)
Set sensing range x = 140 mm
Needed minimum distance to white background y = 4 mm

CHARACTERISTIC CURVE MODE 2

Minimum object height in mm (inch)

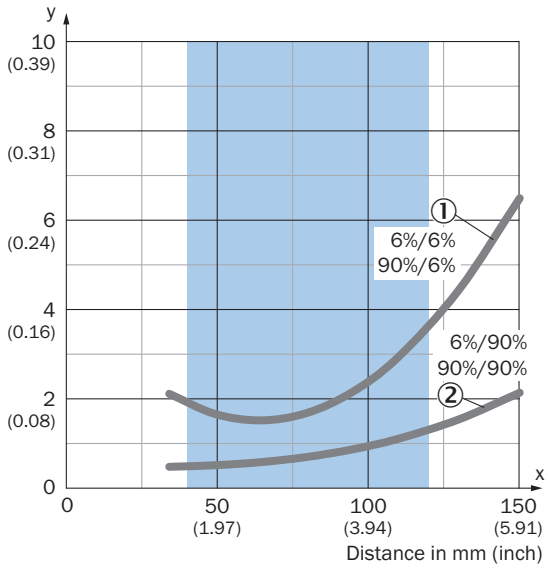

Recommended sensing range for the best performance

① Black background, 6% remission factor
② White background, 90% remission factor

Example:
Reliable detection of the object

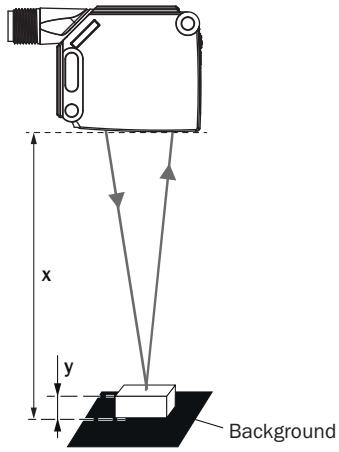

Black background (6 % remission factor)
Distance of sensor to background x = 90 mm
Required minimum object height y = 2 mm
For all objects regardless of their colors

CHARACTERISTIC CURVE MODE 1 AND 6 COMBINED

Minimum distance in mm (y) between the set sensing range and white background (90 % remission)

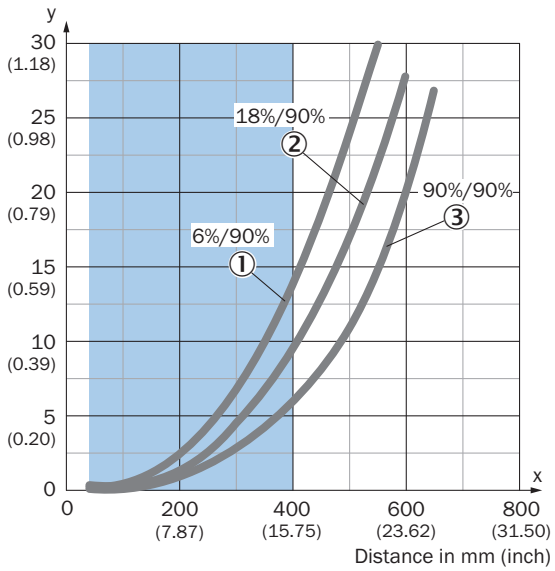

Recommended sensing range for the best performance

① Black object, 6% remission factor
② Gray object, 18% remission factor
③ White object, 90% remission factor

Example:
Safe suppression of the background

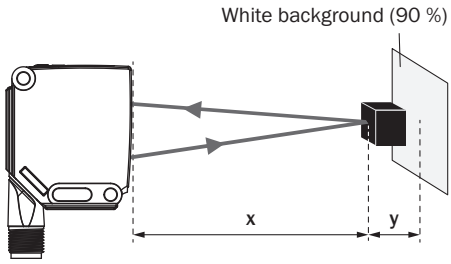

Black object (6 % remission)
Set sensing range x = 200 mm
Needed minimum distance to white background y = 4 mm

LIGHT SPOT SIZE MODE 1, 3, 4, 5

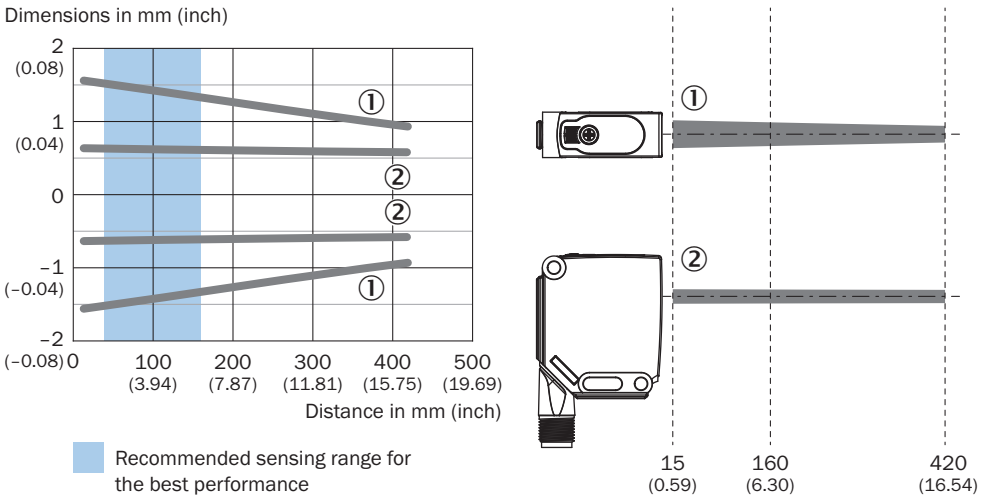

① Light spot horizontal
② Light spot vertical

LIGHT SPOT SIZE MODE 2

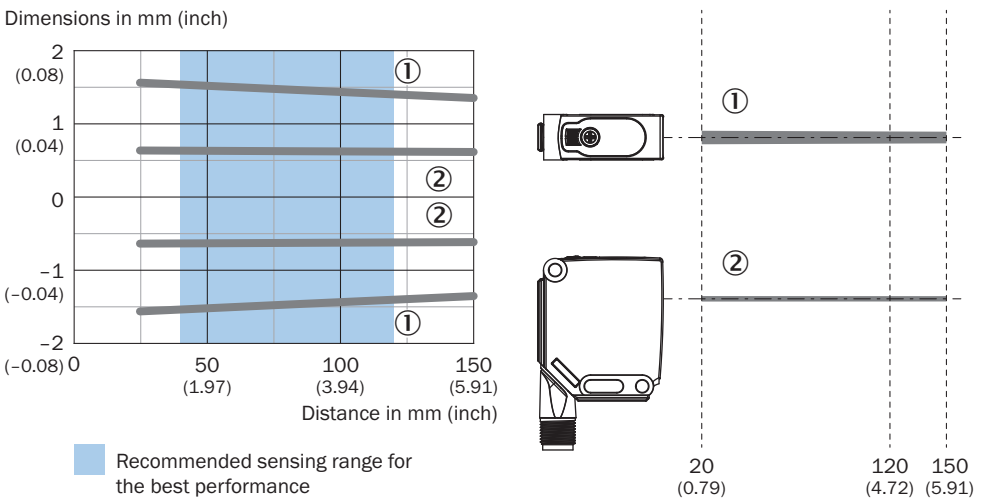

① Light spot horizontal
② Light spot vertical

LIGHT SPOT SIZE MODE 1 AND 6 COMBINED

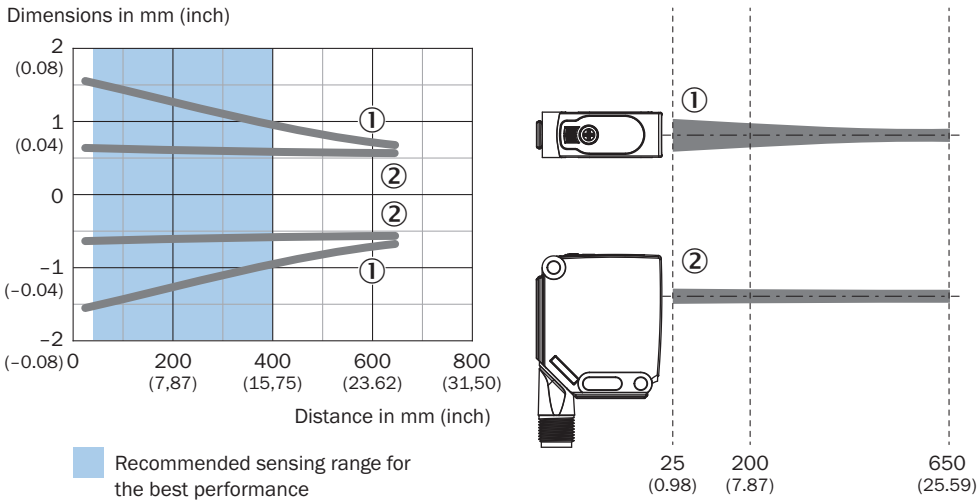

① Light spot horizontal
② Light spot vertical

SENSING RANGE DIAGRAM MODE 2

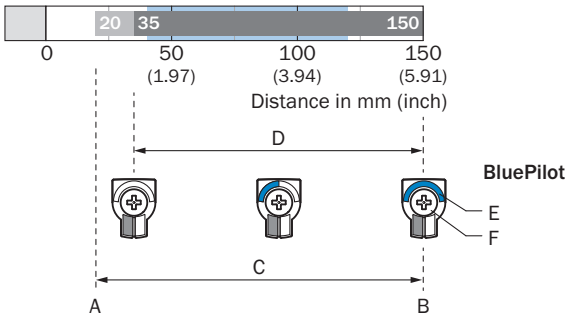

Recommended sensing range for the best performance

A	Sensing range min. in mm
B	Sensing range max. in mm
C	Field of view
D	Adjustable switching threshold for foreground suppression
E	Sensing range indicator
F	Teach-Turn adjustment

SENSING RANGE DIAGRAM MODE 1, 3, 4, 5

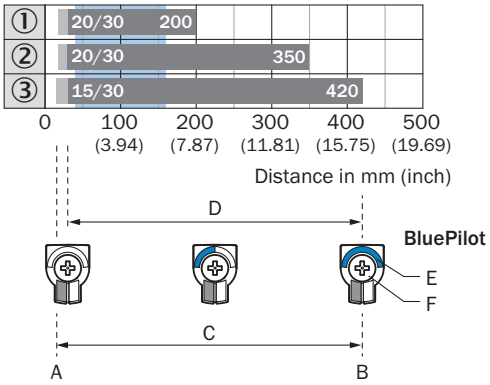

Recommended sensing range for the best performance

1	Black object, 6% remission factor
2	Gray object, 18% remission factor
3	White object, 90% remission factor
A	Sensing range min. in mm
B	Sensing range max. in mm
C	Field of view
D	Adjustable switching threshold for background suppression
E	Sensing range indicator
F	Teach-Turn adjustment

SENSING RANGE DIAGRAM MODE 1 AND 6 COMBINED

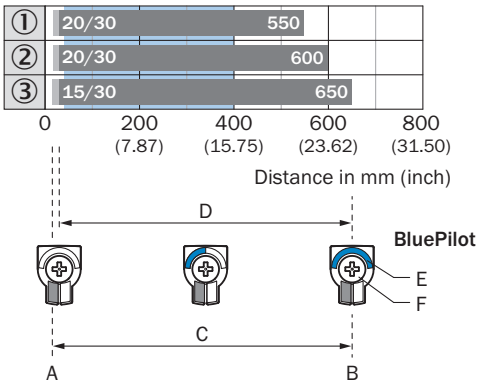

Recommended sensing range for the best performance

1	Black object, 6% remission factor
2	Gray object, 18% remission factor
3	White object, 90% remission factor
A	Sensing range min. in mm
B	Sensing range max. in mm
C	Field of view
D	Adjustable switching threshold for background suppression
E	Sensing range indicator
F	Teach-Turn adjustment

Further information as well as suitable accessories, example applications and downloads such as CAD dimensional models, operating instructions and software can be found at www.sick.com/1126054

SICK AG
WALDKIRCH
GERMANY
SICK.COM

SICK AT A GLANCE

SICK is a leading global technology company for intelligent sensors and integrated solutions in industrial automation. Our technologies set benchmarks, making your industrial processes more efficient, safer and more sustainable – both in logistics and manufacturing operations.

SICK combines sensor intelligence with industry expertise and certified consulting services. We provide the ideal foundation for scalable as well as tailor-made automation solutions and create added value along the entire value chain. Our close partnerships with our customers are more than just a promise: Together, we optimize productivity, improve quality, protect health and safety, and help build a sustainable future. All with empathy and trust.

Since 1946, we have been developing innovative technologies with passion and a pioneering spirit. With a global network in around 40 countries, SICK has a global presence and is always close by. The company's headquarters are located in Waldkirch near Freiburg, Germany. Our customers benefit from our understanding of both local and global requirements, which enables us to deliver tailor-made solutions

SICK
Sensor Intelligence