SICK.COM

DATA SHEET

# MICS3-ACAZ40LZ1P01

microScan3
Safety laser scanners

SICK Sensor Intelligence

Illustration may differ

## SAFETY LASER SCANNERS

# MICS3-ACAZ40LZ1P01

### ORDERING INFORMATION

| Type | part no. |
|---|---|
| MICS3-ACAZ40LZ1P01 | 1100384 |

Further device versions and accessories at www.sick.com/microScan3

## DETAILED TECHNICAL DATA

### FEATURES

| | |
|---|---|
| Product version | microScan3 Core - PROFINET |
| Model | Sensor (1100383) including system plug (2106404), pre-mounted on the underside |
| Application | Indoor |
| Protective field range | 4 m |
| Warning field range | 40 m |
| Number of simultaneously monitored fields | ≤ 4 [1] |
| Number of fields | 8 |
| Number of monitoring cases | 8 |
| Scanning angle | 275° |
| Resolution (can be configured) | 30 mm<br>40 mm<br>50 mm<br>70 mm<br>150 mm<br>200 mm |
| Angular resolution | 0.39° |
| Response time | 95 ms |
| Protective field supplement | 65 mm |

[1] Protection, warning or contour detection fields.

### SAFETY-RELATED PARAMETERS

| | |
|---|---|
| Type | Type 3 (IEC 61496) |
| Safety integrity level | SIL 2 (IEC 61508) |
| Category | Category 3 (EN ISO 13849) |
| Performance level | PL d (EN ISO 13849) |
| $PFH_D$ (mean probability of a dangerous failure per hour) | $8.0 \times 10^{-8}$ |
| Conformities | Conformance Class C |

| | |
|---|---|
| $T_M$ (mission time) | 20 years (EN ISO 13849) |
| Safe state in the event of a fault | The safety outputs via the network are logic 0. |

## FUNCTIONS

| | |
|---|---|
| Restart interlock | ✓ |
| Multiple sampling | ✓ |
| Monitoring case switching | ✓ |
| Simultaneous monitoring | ✓ |
| Static protective field switching | ✓ |
| Safe contour detection | ✓ |
| Contour as a reference | ✓ |
| Integrated configuration memory | ✓ |
| Measured data output | Via Ethernet |

## INTERFACES

| | |
|---|---|
| Connection type | |
| Voltage supply | 1 x male connector, M12, 5-pin, L-coded |
| Fieldbus, industrial network | 2 x SCRJ female connector for push-pull male connector (optical fibers) |
| Outputs | |
| OSSD pairs | 0 |
| Safety outputs via network | 4 |
| Configuration method | PC with Safety Designer (Configuration and Diagnostic Software) |
| Configuration and diagnostics interface | USB 2.0, Mini-USB, Ethernet |
| Fieldbus, industrial network | PROFINET |
| Protocol | PROFIsafe |
| Supported protocol versions | PROFINET specification V2.3<br>PROFIsafe profile in accordance with specification V2.6.1<br>PROFIsafe profile in accordance with specification V2.4 |
| GSDML | According to GSDML specification V2.33 |
| Cycle time | 1 ms, 2 ms, 4 ms, 8 ms, 16 ms ... |
| Conformance | Conformance Class C |
| Network management | SNMP<br>MIB-2<br>LLDP in accordance with IEEE 802.1AB<br>MRP client support |
| Net load | Net load class III in accordance with security level 1 test |
| Switch properties | 2 port real-time switch compliant with IEEE 802 |
| Port properties | 100BASE-POF |
| Diagnostics | I&M data sets 0 ... 5<br>PROFINET alarms<br>Diagnostics of attenuation via POF |
| Additional services | PROFIenergy<br>F_iPar_CRC<br>Acyclic read-/write services for communication via TCI<br>SNTP (client and server) |
| Additional interfaces | TCP/IP communication via port 9000 |
| Display elements | Graphic color display, LEDs |

## ELECTRONICS

| | |
|---|---|
| Protection class | III (EN 61140) |
| Supply voltage $V_s$ | 24 V DC (16.8 V DC ... 30 V DC) |
| Power consumption typical | 8.4 W |

## MECHANICS

| | |
|---|---|
| Dimensions (W x H x D) | 112 mm x 163.1 mm x 111.1 mm (without system plug) |
| Weight | 1.65 kg |
| Housing material | Aluminum |
| Housing color | RAL 1021 (yellow), RAL 9005 (black) |
| Optics cover material | Polycarbonate |
| Optics cover surface finish | Outside with scratch-resistant coating |

## AMBIENT DATA

| | |
|---|---|
| Enclosure rating | IP65 (IEC 60529) |
| Ambient light immunity | ≤ 40 klx (IEC 61496-3) [1] |
| Ambient operating temperature | –10 °C ... +50 °C |
| Storage temperature | –25 °C ... +70 °C |
| Vibration resistance | IEC 60068-2-6, IEC 60068-2-64, IEC 60721-3-5, IEC TR 60721-4-3, IEC 61496-1, IEC 61496-3 |
| Class | 5M1 (IEC 60721-3-5)<br>3M4 (IEC TR 60721-4-3) |
| Shock resistance | IEC 60068-2-27, IEC 60721-3-5, IEC TR 60721-4-3, IEC 61496-1, IEC 61496-3 |
| Class | 5M1 (IEC 60721-3-5)<br>3M4 (IEC TR 60721-4-3) |
| Continuous shock | 100 m/s², 16 ms<br>150 m/s², 6 ms |
| EMC | IEC 61496-1, IEC 61000-6-2, IEC 61000-6-4 |

[1] Typical ambient light immunity, for ambient light sources directly in the scan plane in accordance with IEC 61496-3: ≤ 3 klx.

## OTHER INFORMATION

| | |
|---|---|
| Type of light | Pulsed laser diode |
| Wave length | 845 nm |
| Detectable remission factor | 1.8% to several 1000% |
| Laser class | 1 (21 CFR 1040.10 and 1040.11, IEC 60825-1) |

## CERTIFICATES

| | |
|---|---|
| EU declaration of conformity | ✓ |
| UK declaration of conformity | ✓ |
| ACMA declaration of conformity | ✓ |
| China RoHS | ✓ |
| cULus certificate | ✓ |
| Profinet certificate | ✓ |
| PROFIsafe certificate | ✓ |
| EC-Type-Examination approval | ✓ |
| EC-Type-Examination approval (Machinery Regulation) | ✓ |
| China GB certificate | ✓ |
| PROFIenergy certificate | ✓ |
| Information according to Art. 3 of Data Act (Regulation EU 2023/2854) | ✓ |

**DIMENSIONAL DRAWING**

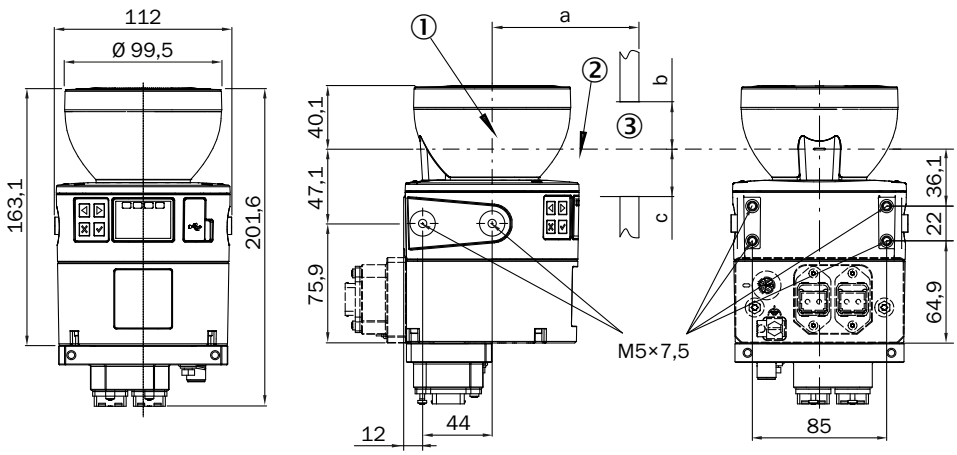


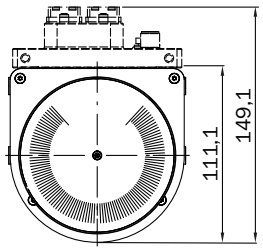


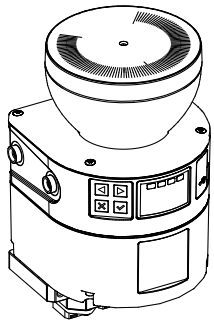

Dimensions in mm (inch)
① mirror axis of rotation
② scan plane
③ required viewing slit (a: length of the viewing slit, b: minimum height above the scan plane, c: minimum height below the scan plane. See the operating instructions for details.)

**PINOUTS VOLTAGE SUPPLY**

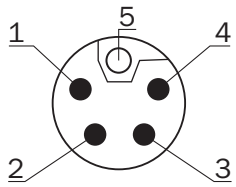


| Pin | Designation | Description |
|---|---|---|
| 1 | +24 V DC | Supply voltage +24 V DC |
| 2 | n.c. | Not connected |
| 3 | 0 V DC | Supply voltage 0 V DC |
| 4 | n.c. | Not connected |
| 5 | FE | Functional earth/shielding |
| For details see operating instructions | | |

**PINOUTS ETHERNET**

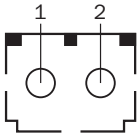

| Pin | Designation | Description |
|---|---|---|
| 1 | TX | Send data |
| 2 | RX+ | Receive data + |
| For details see operating instructions | | |

Further information as well as suitable accessories, example applications and downloads such as CAD dimensional models, operating instructions and software can be found at www.sick.com/1100384

SICK AG
WALDKIRCH
GERMANY
SICK.COM

# SICK AT A GLANCE

SICK is a leading global technology company for intelligent sensors and integrated solutions in industrial automation. Our technologies set benchmarks, making your industrial processes more efficient, safer and more sustainable – both in logistics and manufacturing operations.

SICK combines sensor intelligence with industry expertise and certified consulting services. We provide the ideal foundation for scalable as well as tailor-made automation solutions and create added value along the entire value chain. Our close partnerships with our customers are more than just a promise: Together, we optimize productivity, improve quality, protect health and safety, and help build a sustainable future. All with empathy and trust.

Since 1946, we have been developing innovative technologies with passion and a pioneering spirit. With a global network in around 40 countries, SICK has a global presence and is always close by. The company's headquarters are located in Waldkirch near Freiburg, Germany. Our customers benefit from our understanding of both local and global requirements, which enables us to deliver tailor-made solutions

SICK
Sensor Intelligence