SICK.COM




DATA SHEET

# LFV330-XXGAVXPT0500

LFV300
Level sensors

SICK Sensor Intelligence



Illustration may differ

## LEVEL SENSORS

# LFV330-XXGAVXPT0500

### ORDERING INFORMATION

| Type | part no. |
|---|---|
| LFV330-XXGAVXPT0500 | 6082164 |

Further device versions and accessories at www.sick.com/LFV300

## DETAILED TECHNICAL DATA

### FEATURES

| | |
|---|---|
| Measurement | Switch |
| Probe type | Tuning fork |
| Probe length | 500 mm |
| Process pressure | –1 bar ... 64 bar |
| Process temperature | –50 °C ... +150 °C |
| Fill material density | 0.5 g/cm³ ... 2.5 g/cm³ |

### PERFORMANCE

| | |
|---|---|
| Accuracy of sensor element | ± 2 mm |
| Reproducibility | ≤ 1 mm |
| Viscosity | 0.1 mPas ... 10,000 mPas |
| Response time | 500 ms |
| MTBF | 9,73*10^6 h |

### ELECTRONICS

| | |
|---|---|
| Communication interface | - |
| Supply voltage | 10 V DC ... 55 V DC |
| Residual ripple | ≤ 5 $V_{pp}$ |
| Power consumption | < 10 mA |
| Initialization time | < 2 s |
| VDE protection class 2 | ✓ |
| Connection type | M20 x 1.5 |
| Output signal | 1 x PNP/NPN |
| Electronics | Volt-free transistor output PNP/ NPN |
| Hysteresis | 2 mm |

| | |
|---|---|
| Output current | < 300 mA |
| Inductive load | ≤ 1 H |
| Capacitive load | 100 nF |
| Enclosure rating | IP66 / IP67 |
| Temperature drift | 0.03 mm/K |

## MECHANICS

| | |
|---|---|
| Wetted parts | Stainless steel 316L (optional Ra ≤ 0.8 µm) |
| Process connection | G 1 A PN 64 |
| Sensor material | Stainless steel 1.4404 |

## AMBIENT DATA

| | |
|---|---|
| Ambient operating temperature | –40 °C ... +70 °C |
| Ambient temperature, storage | –40 °C ... +80 °C |

## CERTIFICATES

| | |
|---|---|
| EU declaration of conformity | ✓ |
| UK declaration of conformity | ✓ |
| ACMA declaration of conformity | ✓ |
| China RoHS | ✓ |

**DIMENSIONAL DRAWING LFV330**

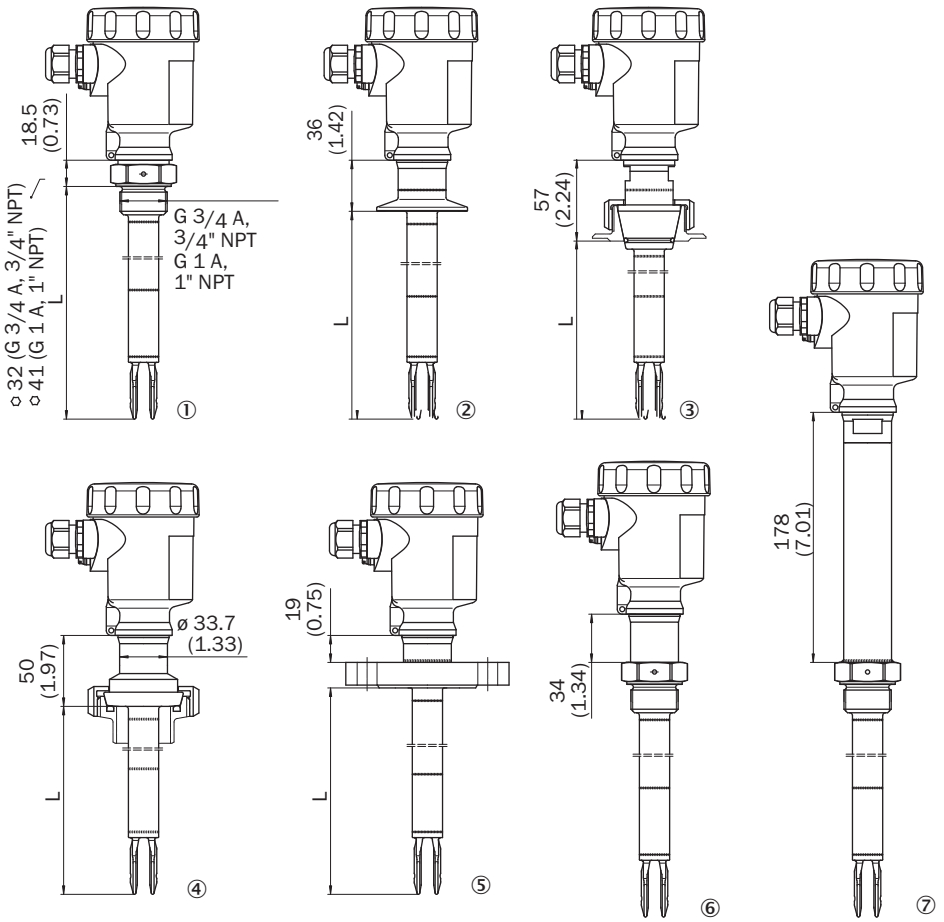


Dimensions in mm (inch)
① Thread
② Tri-Clamp
③ DN 25 cone
④ Bolting D 40
⑤ Flange
⑥ Gas-tight leadthrough
⑦ Temperature adapter

**DIMENSIONAL DRAWING MARKING ON THE WELDED FLANGE**

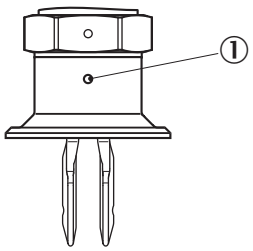


Dimensions in mm (inch)
① Marking

**CONNECTION DIAGRAM PNP ACTION**

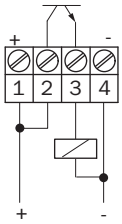


**CONNECTION DIAGRAM NPN ACTION**

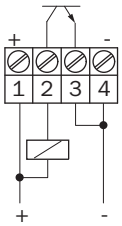


**CONNECTION DIAGRAM TRANSISTOR - ELECTRONIC MODULE**

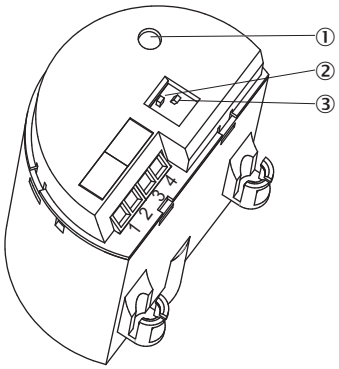


① Signal lamp (LED)
② DIL switch for mode adjustment
③ DIL-switch for sensitivity adjustment

**INSTRUCTION FOR INSTALLATION INFLOWING MEDIUM**

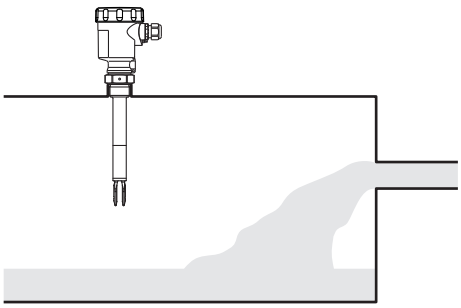

**CHARACTERISTIC CURVE AMBIENT TEMPERATURE - PROCESS TEMPERATURE**

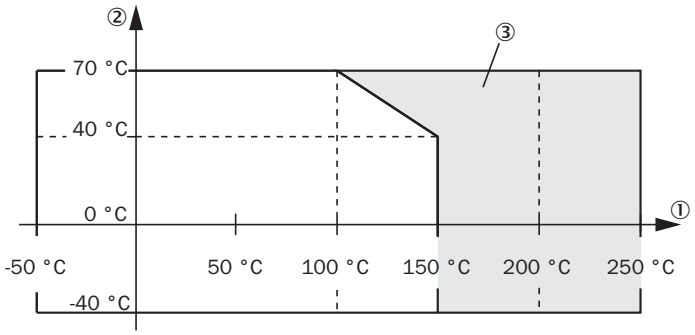


① Process temperature in °C (°F)
② Ambient temperature in °C (°F)
③ Temperature range with temperature adapter

Further information as well as suitable accessories, example applications and downloads such as CAD dimensional models, operating instructions and software can be found at www.sick.com/6082164

SICK AG
WALDKIRCH
GERMANY
SICK.COM

# SICK AT A GLANCE

SICK is a leading global technology company for intelligent sensors and integrated solutions in industrial automation. Our technologies set benchmarks, making your industrial processes more efficient, safer and more sustainable – both in logistics and manufacturing operations.

SICK combines sensor intelligence with industry expertise and certified consulting services. We provide the ideal foundation for scalable as well as tailor-made automation solutions and create added value along the entire value chain. Our close partnerships with our customers are more than just a promise: Together, we optimize productivity, improve quality, protect health and safety, and help build a sustainable future. All with empathy and trust.

Since 1946, we have been developing innovative technologies with passion and a pioneering spirit. With a global network in around 40 countries, SICK has a global presence and is always close by. The company's headquarters are located in Waldkirch near Freiburg, Germany. Our customers benefit from our understanding of both local and global requirements, which enables us to deliver tailor-made solutions

SICK

Sensor Intelligence