SICK.COM

DATA SHEET

WL45-R260

W45
Photoelectric sensors

SICK Sensor Intelligence

Illustration may differ

PHOTOELECTRIC SENSORS

WL45-R260

ORDERING INFORMATION

Type	part no.
WL45-R260	1008562

Further device versions and accessories at www.sick.com/W45

DETAILED TECHNICAL DATA

FEATURES

Functional principle	Photoelectric retro-reflective sensor
Functional principle detail	With minimum distance to reflector (dual lens system)
Dimensions (W x H x D)	60 mm x 105 mm x 105 mm
Housing design (light emission)	Rectangular
Sensing range max.	1 m ... 55 m [1]
Sensing range	1 m ... 45 m [1]
Type of light	Visible red light
Light source	LED [2]
Light spot size (distance)	Ø 230 mm (16 m)
Adjustment	Potentiometer
Special features	Cable gland, for cross-section: 0,14 mm^2 ... 2,5 mm^2, max. 16 A

[1] OP60-00.

[2] Average service life: 100,000 h at T_U = +25 °C.

MECHANICS/ELECTRONICS

Supply voltage U_B	20 V AC/DC ... 250 V AC/DC [1]
Power consumption	≤ 3 VA

[1] Limit values.

[2] Provide suitable spark suppression for inductive or capacitive loads.

[3] With light/dark ratio 1:1.

[4] A = V_S connections reverse-polarity protected.

[5] C = interference suppression.

[6] Up to 140 °C with cooling plates (see accessories).

Switching output	Relay, electrically isolated [2]
Output function	Change-over contacts
Switching mode	Light/dark switching [2]
Switching mode selector	Selectable via time delay selector switch
Switching current (switching voltage)	4 A @ 250 V AC, 4 A @ 24 V DC, 0.125 A @ 120 V DC UL: 4 A @ 250 V AC, general purpose / 2 A @ 250 V AC, pilot duty
Response time	≤ 20 ms
Switching frequency	10 Hz [3]
Time functions	Switch-on delay Off delay ON and OFF delay
Delay time	Adjustable via time delay selector switch, 0.5 s ... 12 s
Connection type	Terminal connection with PG13,5, 6-pin
Circuit protection	A [4] C [5]
Protection class	I
Weight	800 g
Polarizing filter	✓
Housing material	Metal
Enclosure rating	IP67
Usage category	AC-15, DC-13 According to EN 60947-1
Ambient operating temperature	–25 °C ... +55 °C [6]
Ambient temperature, storage	–40 °C ... +70 °C
UL File No.	NRKH.E181493 & NRKH7.E181493

[1] Limit values.

[2] Provide suitable spark suppression for inductive or capacitive loads.

[3] With light/dark ratio 1:1.

[4] A = V_s connections reverse-polarity protected.

[5] C = interference suppression.

[6] Up to 140 °C with cooling plates (see accessories).

SAFETY-RELATED PARAMETERS

$MTTF_D$	467 years
DC_{avg}	0 %

CERTIFICATES

EU declaration of conformity	✓
UK declaration of conformity	✓
ACMA declaration of conformity	✓
Moroccan declaration of conformity	✓
China RoHS	✓
CCC certificate	✓
cULus certificate	✓
Photobiological safety (DIN EN 62471) certificate	✓

ADJUSTMENTS

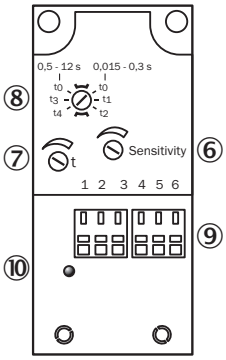

⑥ sensitivity control
⑦ Time control
⑧ time delay selector switch
⑨ terminal strip
⑩ Status indicator

CONNECTION TYPE

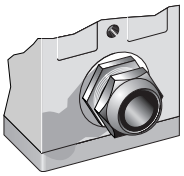

CONNECTION DIAGRAM

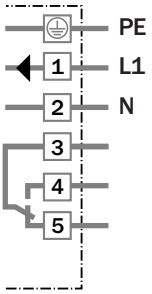

CHARACTERISTIC CURVE

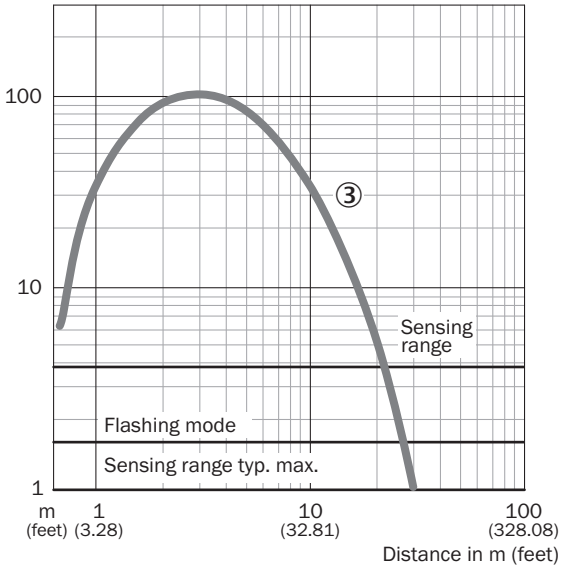

SENSING RANGE DIAGRAM

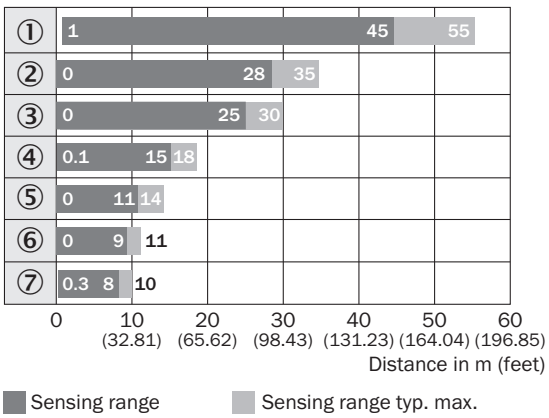

Reflector type

① OP60 ... ∞
② 4 x PL80
③ PL80A
④ C110
⑤ PL50
⑥ PL30
⑦ Reflective tape Diamond Grade

DIMENSIONAL DRAWING

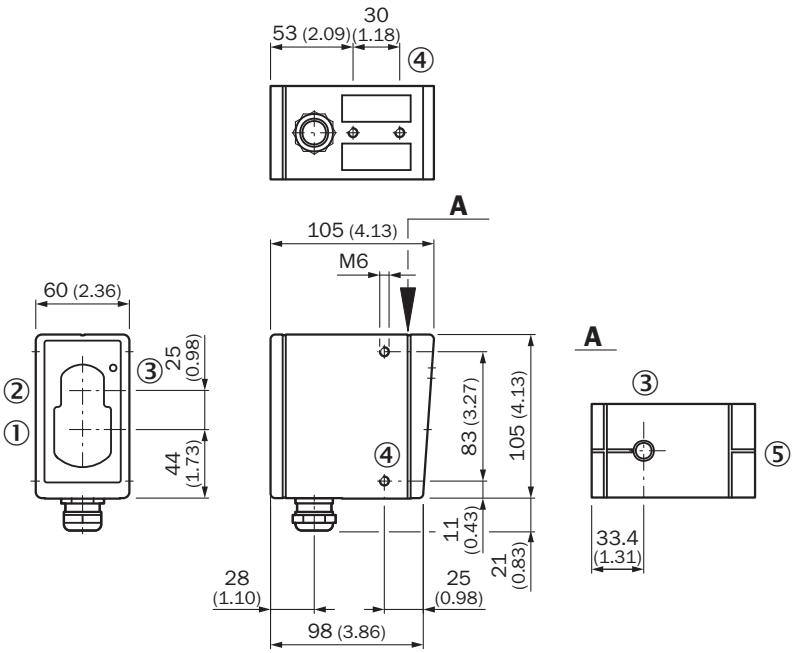

Dimensions in mm (inch)
① Center of optical axis, sender
② Center of optical axis, receiver
③ LED signal strength indicator
④ M6 threaded mounting hole, 8 mm deep
⑤ Alignment sight

Further information as well as suitable accessories, example applications and downloads such as CAD dimensional models, operating instructions and software can be found at www.sick.com/1008562

SICK AG
WALDKIRCH
GERMANY
SICK.COM

SICK AT A GLANCE

SICK is a leading global technology company for intelligent sensors and integrated solutions in industrial automation. Our technologies set benchmarks, making your industrial processes more efficient, safer and more sustainable – both in logistics and manufacturing operations.

SICK combines sensor intelligence with industry expertise and certified consulting services. We provide the ideal foundation for scalable as well as tailor-made automation solutions and create added value along the entire value chain. Our close partnerships with our customers are more than just a promise: Together, we optimize productivity, improve quality, protect health and safety, and help build a sustainable future. All with empathy and trust.

Since 1946, we have been developing innovative technologies with passion and a pioneering spirit. With a global network in around 40 countries, SICK has a global presence and is always close by. The company's headquarters are located in Waldkirch near Freiburg, Germany. Our customers benefit from our understanding of both local and global requirements, which enables us to deliver tailor-made solutions

SICK
Sensor Intelligence