SICK.COM

DATA SHEET

SLG25S-020SER11A00

SLG-2
Automation light grids

SICK Sensor Intelligence

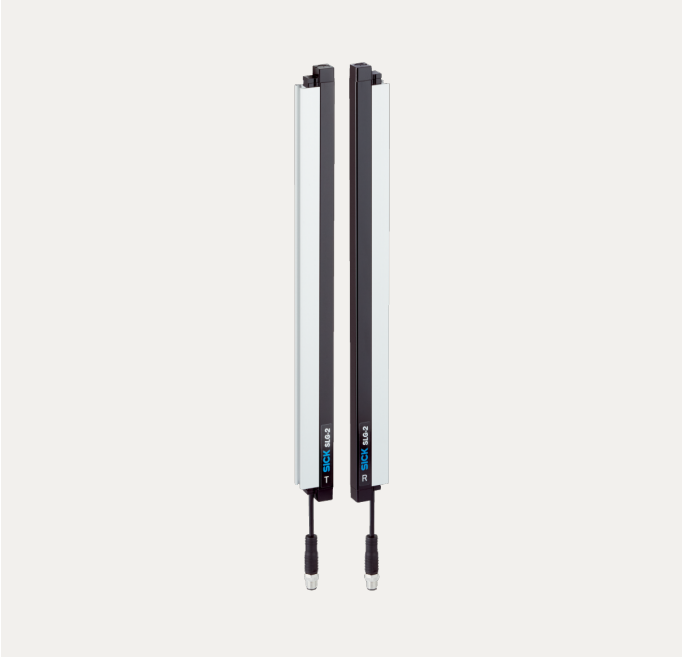

Illustration may differ

AUTOMATION LIGHT GRIDS

SLG25S-020SER11A00

ORDERING INFORMATION

Type	part no.
SLG25S-020SER11A00	1124697

Further device versions and accessories at www.sick.com/SLG-2

DETAILED TECHNICAL DATA

FEATURES

Included with delivery	1 × sender 1 × receiver 1 x safety notes
Functional principle	Sender/receiver
Sensing range	
Limit values	70 mm ... 2,150 mm
Parallel beam (recommended)	70 mm ... 1,500 mm
3 x cross beam (recommended)	160 mm ... 1,500 mm
Blind zone	
Distance from 1st Beam to leading edge of housing (connection side)	4.6 mm
Distance from last beam to leading edge of housing (top)	19.6 mm [1]
Detection height	200 mm
Beam separation	25 mm
Optical light exit	Slim
Detection capability	
Minimum detectable object (MDO), parallel beam	30 mm [2]
Minimum detectable object (MDO), 3 x cross beam	≥ 16.5 mm [2]
Factory setting	
Beam function	Parallel beam
Pin 2 (MF)	Teach-in input
Pin 4 (OUT)	Object detection output = “HIGH”
IO-Link (process data)	Q_L/Q_{int} Status, System status, Beam status
Teach-in (default)	Auto teach-in
Adjustment	

[1] For a detection height < 700 mm, the measured value can vary by up to 1 mm from the measured values specified here.

[2] MDO: Minimum detectable size of an arbitrarily shaped object.

[3] Depends on the sensing range / number of beams / cross beam.

IO-Link	For configuring the sensor parameters and Smart Task functions
Emitted beam	
Light source	LED
Type of light	Infrared light
Number of beams	8
LED key figures	
Normative reference	EN 62471:2008-09 | IEC 62471:2006, modified
LED risk group marking	Free group
Wave length	850 nm
Average service life	Average service life: 100,000 h at T_U = +25 °C
Time specifications	
Initialization time	0.4 s ... 2 s [3]
Teach-in time	0.75 s ... 50 s [3]
Scan time, parallel beam	1 ms
Scan time, cross beam	2 ms
Repeatability, parallel beam	1 ms
Repeatability, cross beam	3 ms
Minimum dwell time, parallel beam	2 ms
Minimum dwell time, cross beam	4 ms
Max. response time, parallel beam	2.9 ms
Max. response time, cross beam	6 ms
Type of synchronization	Optical (2 beams)

[1] For a detection height < 700 mm, the measured value can vary by up to 1 mm from the measured values specified here.

[2] MDO: Minimum detectable size of an arbitrarily shaped object.

[3] Depends on the sensing range / number of beams / cross beam.

INTERFACES

IO-Link	✓, V1.1
Data transmission rate	COM3 (230,4 kBaud)
Maximum cable length	20 m
Cycle time	2.3 ms
Process data length	32 Byte

ELECTRONICS

Supply voltage U_B	DC 18 V DC ... 30 V DC [1]
Ripple	≤ 1.3 V_{pp}
Power consumption	
Sender	≤ 35.6 mA [2]
Receiver	≤ 43.8 mA [2]
Digital output	
Number	2
Type	Push-pull: PNP/NPN
Output signal voltage HIGH/LOW	U_B-3 V/<3 V
Output load, Inductive	1 H
Output load, capacitive	100 nF
Output current $I_{max.}$	100 mA
Output current, rest	< 0.5 mA
Digital input	
Number	1
Input signal voltage HIGH/LOW	>15 V/<5 V
Protection class	III [3]

[1] Without load.

[2] At 24 V.

[3] EN 61140.

UL File No.	NRKH.E181493 & NRKH7.E181493
Circuit protection	U_V connections, reverse polarity protected Output Q short-circuit protected Outputs overcurrent and short-circuit protected

[1] Without load.

[2] At 24 V.

[3] EN 61140.

MECHANICS

Dimensions (W x H x D)	
Width	11.8 mm
Height	199.2 mm
Depth	24.1 mm
Connection type	Cable with M8 male connector, 4-pin
Connection type Detail	
Cable diameter	3.4 mm
Conductor cross section	0.14 mm²
Length of cable	150 mm
Cable material	PVC
Material	
Housing	Aluminum Plastic
Front screen	PMMA
Weight	760 g
Overvoltage protection (required)	1

AMBIENT DATA

Enclosure rating	IP65 [1] IP67
Ambient temperature, operation	–30 °C ... +55 °C
Ambient temperature, storage	–30 °C ... +70 °C
Ambient light immunity	Indirect: 50,000 lx [2]
Shock resistance	10 g, 16 ms, DIN EN 60068-2-27
Vibration resistance	10-150 Hz 0.5 mm, IEC 60068-2-6
Air humidity	≤ 96 %, relative humidity (no condensation)
Electromagnetic compatibility (EMC)	EN 61000-6-2, EN 61000-6-4

[1] Operating in outdoor condition only with a external protection housing.

[2] Sunlight.

SMART TASK

Smart Task name	Base logics
Logic function	Direct AND OR
Timer function	Deactivated Switch-on delay Off delay ON and OFF delay Impulse (one shot)
Switching signal	
Switching signal Q_{L1}	Switching output
Switching signal Q_{L2}	Switching output, external input

DIAGNOSIS

Diagnostics functions	
Device state	Hardware error, temperature warning, operating hours warning
Communication state	Pin short-circuit error, invalid process data
Status of the light signal	Teach error, synchronization error, quality-of-run alarm
Alarm output	Yes

CERTIFICATES

EU declaration of conformity	✓
UK declaration of conformity	✓
ACMA declaration of conformity	✓
Moroccan declaration of conformity	✓
China RoHS	✓
cULus certificate	✓
IO-Link certificate	✓
Photobiological safety (IEC EN 62471)	✓
Information according to Art. 3 of Data Act (Regulation EU 2023/2854)	✓

DIMENSIONAL DRAWING, SENSOR

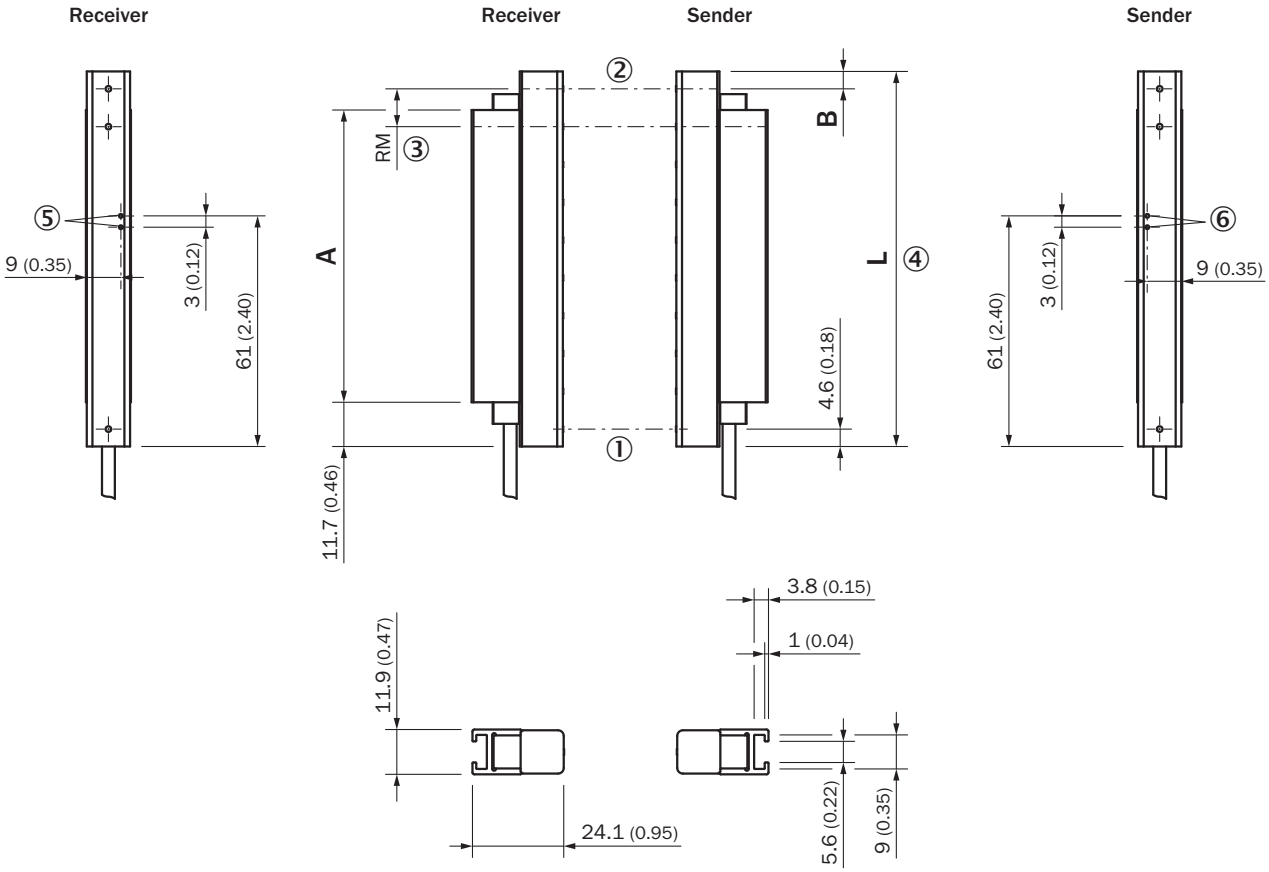

Dimensions in mm (inch)
SLGxxx-xxxSxxxxxxx
① First beam
② last beam
③ beam separation (RM)
④ Housing length
⑤ LED display receiver
⑥ LED display sender

Dimensions in mm (inch)		
–	Length of stabilizer	Housing length
	A	L
SLGxxx-**0 10**xxxxxxxx	77 (3.03)	99,2 (3.91)
SLGxxx-**02 0**xxxxxxxx	178 (7.01)	199,2 (7.84)
SLGxxx-**03 0**xxxxxxxx	276 (10.87)	299,2 (11.78)
SLGxxx-**04 0**xxxxxxxx	376 (14.8)	399,2 (15.72)
SLGxxx-**05 0**xxxxxxxx	475 (18.7)	499,2 (19.65)
SLGxxx-**06 0**xxxxxxxx	576 (22.68)	599,2 (23.6)
SLGxxx-**07 0**xxxxxxxx	676 (26.61)	699,2 (27.53)
SLGxxx-**08 0**xxxxxxxx	776 (30.55)	799,2 (31.46)
SLGxxx-**100**xxxxxxxx	975 (38.39)	999,2 (39.34)
SLGxxx-**120**xxxxxxxx	1.175 (46.26)	1.199,2 (47.21)
SLGxxx-**140**xxxxxxxx	1.374 (54.09)	1.399,2 (55.09)
SLGxxx-**160**xxxxxxxx	1.574 (61.97)	1.599,2 (62.96)
SLGxxx-**180**xxxxxxxx	1.774 (69.84)	1.799,2 (70.83)
SLGxxx-**20 0**xxxxxxxx	1.973 (77.68)	1.999,2 (78.71)
SLGxxx-**220**xxxxxxxx	2.173 (85.55)	2.199,2 (86.58)

Dimensions in mm (inch)		
SLGxxx-**240**xxxxxxxx	2.372 (93.39)	2.399,2 (94.46)
	–	
–	Distance: Housing edge - last beam	–
	B [1]	
SLG**10**x-xxxxxxxxxxx	4,6 (0.18)	
SLG**25**x-xxxxxxxxxxx	19,6 (0.77)	
SLG**50**x-xxxxxxxxxxx	44,6 (1.76)	

[1] for detection height less than 700 mm, the dimension deviates up to 1 mm from the dimensions specified here.

DIMENSIONAL DRAWING, CONNECTION TYPE

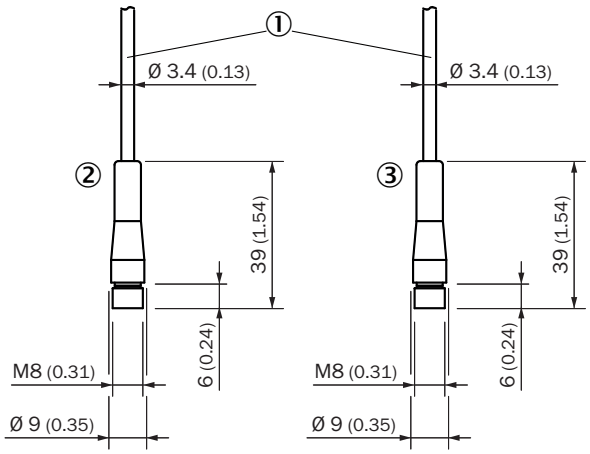

Dimensions in mm (inch)
cable with connector M8
① connection (see technical data for length of cable)
② receiver
③ sender

PINOUTS

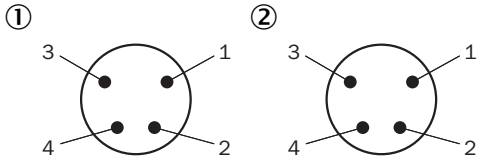

male connector M8, 4-pin
① receiver
② sender

CONNECTION DIAGRAM

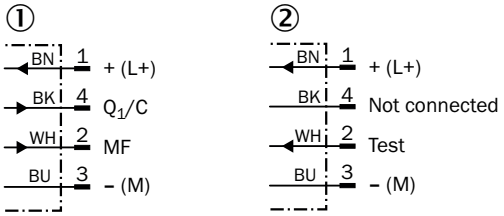

cd-543
① receiver
② sender

INSTRUCTION FOR INSTALLATION MINIMUM DISTANCE BETWEEN 2 LIGHT GRIDS

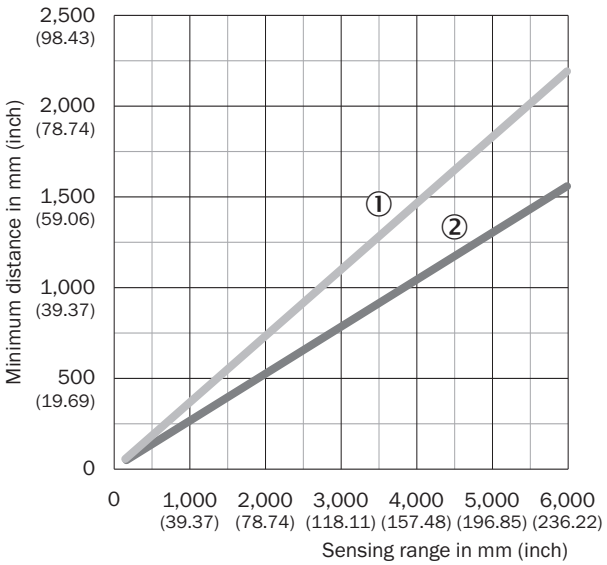

If not installed in opposition, make sure the minimum distance between the two light grid pairs is adhered to
① Minimum distance (safe)
② Minimum distance (typical)

INSTRUCTION FOR INSTALLATION MINIMUM DISTANCE TO REFLECTIVE MATERIALS

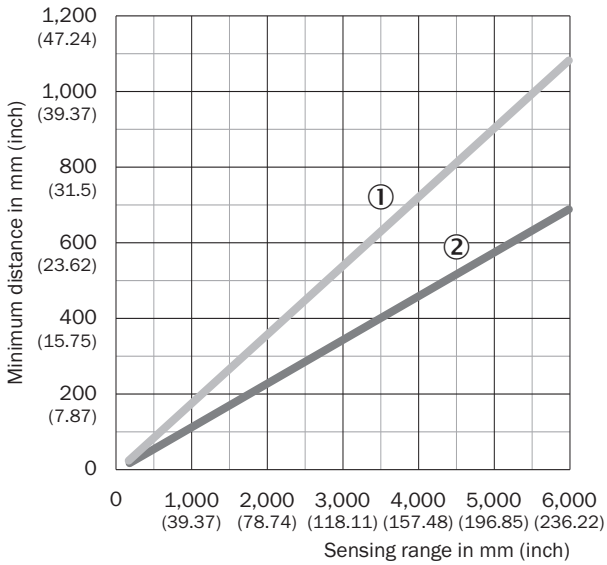

Depending on the sensing range, make sure that there are no reflective objects in the field of view of the light grid pair
① Minimum distance (safe)
② Minimum distance (typical)

INSTRUCTION FOR INSTALLATION SLIM & FLAT

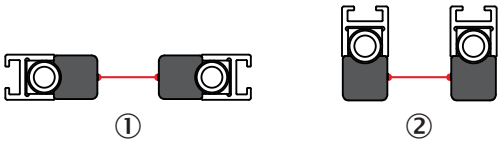

① Slim model = light emission on narrow side
② Flat model = light emission on broad side

DETECTION CAPABILITY MINIMUM DETECTABLE OBJECT (MDO)

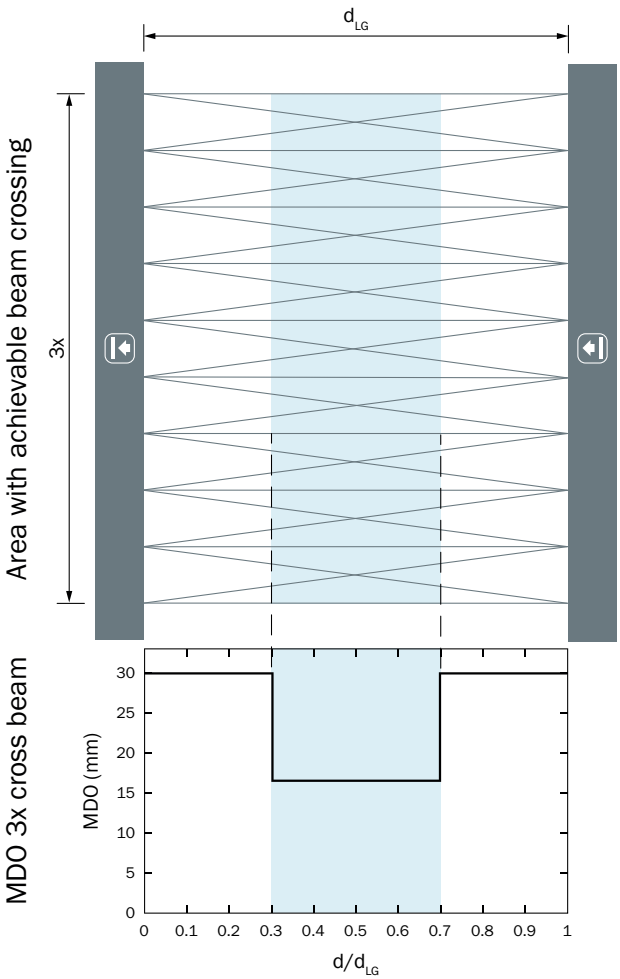

d_{LG} = Installed working distance between sender and receiver

d = Distance to sender or receiver related to the installed working distance

FUNCTIONAL PRINCIPLE OPTICAL SYNCHRONIZATION

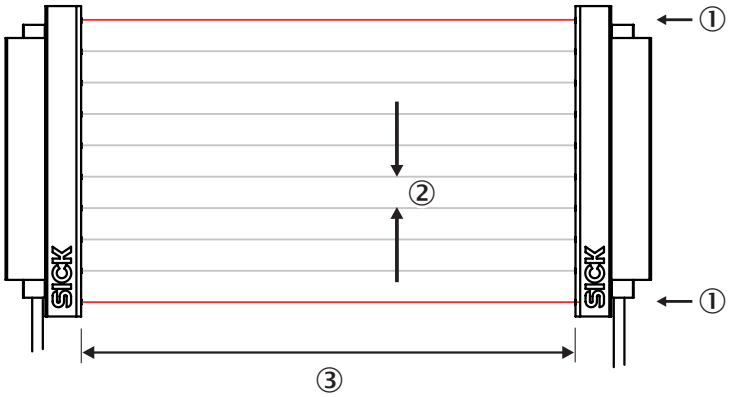

The sender and receiver synchronize with each other optically, so no electrical connection is necessary.
For this reason, either the first or the last beam of the automation light grid must remain clear.
If both beams are interrupted, no measurements can be taken.
① Optical synchronization
② Beam separation
③ scanning range

Further information as well as suitable accessories, example applications and downloads such as CAD dimensional models, operating instructions and software can be found at www.sick.com/1124697

SICK AG
WALDKIRCH
GERMANY
SICK.COM

SICK AT A GLANCE

SICK is a leading global technology company for intelligent sensors and integrated solutions in industrial automation. Our technologies set benchmarks, making your industrial processes more efficient, safer and more sustainable – both in logistics and manufacturing operations.

SICK combines sensor intelligence with industry expertise and certified consulting services. We provide the ideal foundation for scalable as well as tailor-made automation solutions and create added value along the entire value chain. Our close partnerships with our customers are more than just a promise: Together, we optimize productivity, improve quality, protect health and safety, and help build a sustainable future. All with empathy and trust.

Since 1946, we have been developing innovative technologies with passion and a pioneering spirit. With a global network in around 40 countries, SICK has a global presence and is always close by. The company's headquarters are located in Waldkirch near Freiburg, Germany. Our customers benefit from our understanding of both local and global requirements, which enables us to deliver tailor-made solutions

SICK
Sensor Intelligence