SICK.COM

DATA SHEET

WL150-N420

W150
Photoelectric sensors

SICK Sensor Intelligence

Illustration may differ

PHOTOELECTRIC SENSORS

WL150-N420

ORDERING INFORMATION

Type	part no.
WL150-N420	6020685

Further device versions and accessories at www.sick.com/W150

DETAILED TECHNICAL DATA

FEATURES

Functional principle	Photoelectric retro-reflective sensor
Functional principle detail	With minimum distance to reflector (dual lens system)
Dimensions (W x H x D)	10 mm x 28 mm x 17.5 mm
Housing design (light emission)	Rectangular
Sensing range max.	0.01 m ... 0.7 m [1]
Sensing range	0.01 m ... 0.6 m [1]
Focus	Approx. 7.5°
Type of light	Visible red light
Light source	LED [2]
Angle of dispersion	Approx. 7.5°
Adjustment	Potentiometer, 270°
Special feature	Detecting transparent objects
Special applications	Detecting transparent objects

[1] Reflector PL80A.

[2] Average service life: 100,000 h at T_u = +25 °C.

MECHANICS/ELECTRONICS

Supply voltage U_B	10 V DC ... 30 V DC [1]
Ripple	± 10 % [2]
Current consumption	30 mA [3]
Switching output	NPN
Switching mode	Light/dark switching
Switching mode selector	Selectable via L/D control cable
Output current $I_{max.}$	≤ 100 mA
Response time	≤ 0.5 ms [4]
Switching frequency	1,000 Hz [5]
Attenuation along light beam	> 20 %
Connection type	Male connector M8, 4-pin
Circuit protection	A [6] B [7] C [8] D [9]
Protection class	II
Weight	7 g
Polarizing filter	✓
Housing material	Plastic, ABS
Optics material	Plastic, PC
Enclosure rating	IP67
Items supplied	BEF-W150-A mounting bracket, Reflector PL20A
Special feature	Detecting transparent objects
Ambient operating temperature	–25 °C ... +55 °C
Ambient temperature, storage	–40 °C ... +75 °C
UL File No.	NRNT2.E128350 & NRNT8.E128350

[1] Limit values.

[2] May not fall below or exceed U_V tolerances.

[3] Without load.

[4] Signal transit time with resistive load.

[5] With light/dark ratio 1:1.

[6] A = V_S connections reverse-polarity protected.

[7] B = inputs and output reverse-polarity protected.

[8] C = interference suppression.

[9] D = outputs overcurrent and short-circuit protected.

CERTIFICATES

EU declaration of conformity	✓
UK declaration of conformity	✓
ACMA declaration of conformity	✓
Moroccan declaration of conformity	✓
China RoHS	✓
China Compulsory Product Certification (CCC) exempt	✓
cRUus certificate	✓

Photobiological safety (DIN EN 62471) certificate	✓

ADJUSTMENTS

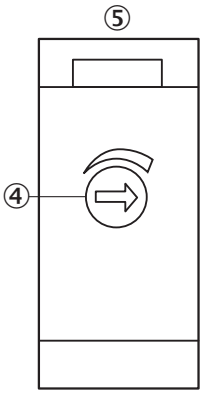

④ sensitivity control 270°
⑤ LED indicator red:
⑤ Light received>=switching threshold

CONNECTION TYPE

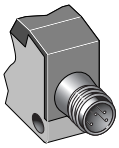

CONNECTION DIAGRAM CD-087

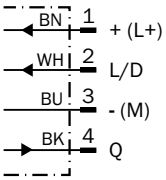

CHARACTERISTIC CURVE

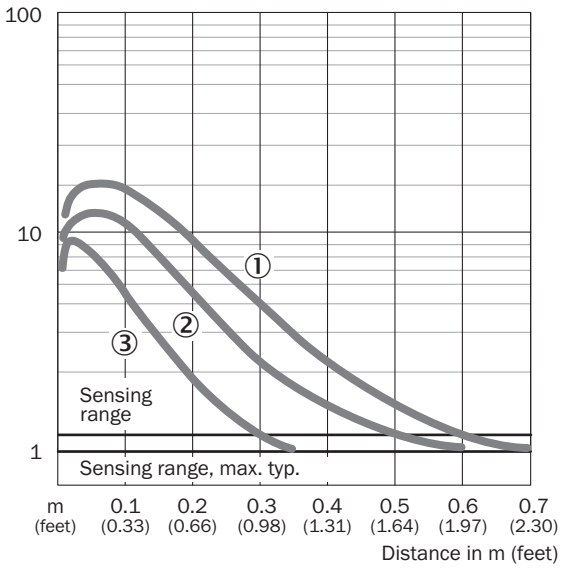

SENSING RANGE DIAGRAM

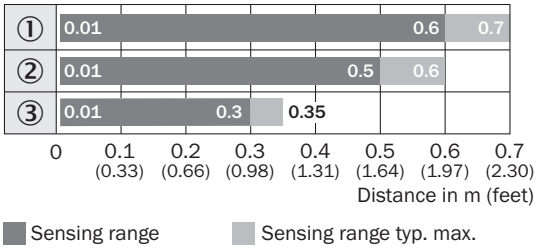

Sensing range Sensing range typ. max.

Reflector type

① PL80A
② PL250
③ PL20A

DIMENSIONAL DRAWING

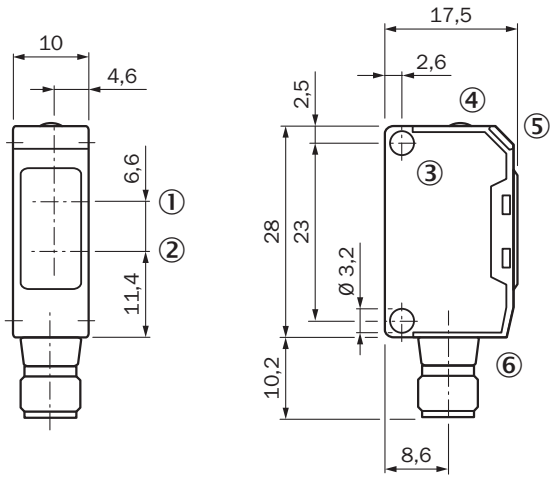

Dimensions in mm (inch)
① Center of optical axis, receiver
② Center of optical axis, sender
③ Mounting hole, Ø 3.2 mm
④ sensitivity control 270°
⑤ LED indicator red:
⑤ Light received>=switching threshold
⑥ Connector M8, 4-pin or cable

Further information as well as suitable accessories, example applications and downloads such as CAD dimensional models, operating instructions and software can be found at www.sick.com/6020685

SICK AG
WALDKIRCH
GERMANY
SICK.COM

SICK AT A GLANCE

SICK is a leading global technology company for intelligent sensors and integrated solutions in industrial automation. Our technologies set benchmarks, making your industrial processes more efficient, safer and more sustainable – both in logistics and manufacturing operations.

SICK combines sensor intelligence with industry expertise and certified consulting services. We provide the ideal foundation for scalable as well as tailor-made automation solutions and create added value along the entire value chain. Our close partnerships with our customers are more than just a promise: Together, we optimize productivity, improve quality, protect health and safety, and help build a sustainable future. All with empathy and trust.

Since 1946, we have been developing innovative technologies with passion and a pioneering spirit. With a global network in around 40 countries, SICK has a global presence and is always close by. The company's headquarters are located in Waldkirch near Freiburg, Germany. Our customers benefit from our understanding of both local and global requirements, which enables us to deliver tailor-made solutions

SICK
Sensor Intelligence