SICK.COM

DATA SHEET

WTB4SC-3P2262VA00

W4
Photoelectric sensors

SICK Sensor Intelligence

Illustration may differ

PHOTOELECTRIC SENSORS

WTB4SC-3P2262VA00

ORDERING INFORMATION

Type	part no.
WTB4SC-3P2262VA00	1097824

Further device versions and accessories at www.sick.com/W4

DETAILED TECHNICAL DATA

FEATURES

Functional principle	Photoelectric proximity sensor
Functional principle detail	Background suppression
Sensing range max.	4 mm ... 180 mm [1]
Sensing range	10 mm ... 180 mm [1]
Emitted beam	
Light source	PinPoint LED [2]
Type of light	Visible red light
Light spot size (distance)	Ø 6.5 mm (150 mm)
Key LED figures	
Wave length	650 nm
Adjustment	Single teach-in button
Special applications	Hygienic and washdown zones
Housing design	Washdown
Pin 2 configuration	External input, Teach-in input, Sender off input, Detection output, logic output

[1] Object with 90% remission (based on standard white, DIN 5033).

[2] Average service life: 100,000 h at T_U = +25 °C.

SAFETY-RELATED PARAMETERS

$MTTF_D$	868 years
DC_{avg}	0 %

COMMUNICATION INTERFACE

IO-Link	✓ , IO-Link V1.1
Data transmission rate	COM2 (38,4 kBaud)
Cycle time	2.3 ms
Process data length	16 Bit
Process data structure	Bit 0 = switching signal Q_{L1} Bit 1 = switching signal Q_{L2} Bit 2 ... 15 = empty
VendorID	26
DeviceID HEX	0x8001E6
DeviceID DEC	8389094
Compatible master port type	A
SIO mode support	Yes

ELECTRONICS

Supply voltage U_B	10 V DC ... 30 V DC [1]
Ripple	< 5 V_{pp} [2]
Current consumption	30 mA [3]
Protection class	III
Digital output	
Type	PNP [4]
Switching mode	Light/dark switching
Output current $I_{max.}$	≤ 100 mA
Response time	< 0.5 ms [5]
Repeatability (response time)	150 µs [6]
Switching frequency	1,000 Hz [7]
Output function	Complementary
Circuit protection	A [8] B [9] C [10]
Response time Q/ on Pin 2	300 µs ... 450 µs [5] [6]
Switching frequency Q / to pin 2	1,000 Hz [11]

[1] Limit values, reverse-polarity protected, operation in short-circuit protected network: max. 8 A.

[2] May not fall below or exceed U_v tolerances.

[3] Without load.

[4] Pin 4: This switching output must not be connected to another output.

[5] Signal transit time with resistive load.

[6] Valid for Q \ on Pin2, if configured with software.

[7] With light/dark ratio 1:1.

[8] A = V_s connections reverse-polarity protected.

[9] B = inputs and output reverse-polarity protected.

[10] C = interference suppression.

[11] With light / dark ratio 1:1, valid for Q \ on Pin2, if configured with software.

MECHANICS

Housing	Rectangular
Design detail	Slim
Dimensions (W x H x D)	15.25 mm x 44.9 mm x 22.2 mm

[1] Max. tightening torque: 0.6 Nm.

Connection	Male connector M8, 4-pin [1]
Material	
Housing	Metal, Stainless steel V4A (1.4404, 316L)
Front screen	Plastic, PMMA
Weight	40 g

[1] Max. tightening torque: 0.6 Nm.

AMBIENT DATA

Enclosure rating	IP66 IP67 IP68 IP69K [1]
Ambient operating temperature	–30 °C ... +70 °C [2] –30 °C ... +60 °C
Ambient temperature, storage	–30 °C ... +75 °C
UL File No.	NRKH.E181493 & NRKH7.E181493

[1] Only in case of correctly mounted IP69K connecting cable.

[2] At UV ≤ 24 V and IA < 30 mA.

SMART TASK

Smart Task name	Base logics
Logic function	Direct AND OR WINDOW Hysteresis
Timer function	Deactivated Switch-on delay Off delay ON and OFF delay Impulse (one shot)
Inverter	Yes
Switching frequency	SIO Direct: 1000 Hz SIO Logic: 600 Hz IOL: 450 Hz
Response time	SIO Direct: 300 µs ... 450 µs [1] SIO Logic: 750 µs ... 900 µs [2] IOL: 800 µs ... 1200 µs [3]
Repeatability	SIO Direct: 150 µs [1] SIO Logic: 150 µs [2] IOL: 400 µs [3]
Switching signal	
Switching signal Q_{L1}	Switching output
Switching signal Q_{L2}	Switching output

[1] SIO Direct: sensor operation in standard I/O mode without IO-Link communication and without using internal sensor logic or time parameters (set to "direct"/"deactivated").

[2] SIO Logic: Sensor operation in standard I/O mode without IO-Link communication. Sensor-internal logic or timing parameters plus Automation Functions used.

[3] IOL: Sensor operation with full IO-Link communication and usage of logic, timing and Automation Function parameters.

DIAGNOSIS

Device status	Yes

CERTIFICATES

EU declaration of conformity	✓
UK declaration of conformity	✓
ACMA declaration of conformity	✓
Moroccan declaration of conformity	✓
China RoHS	✓
China Compulsory Product Certification (CCC) exempt	✓
ECOLAB certificate	✓
Photobiological safety (DIN EN 62471) certificate	✓
Information according to Art. 3 of Data Act (Regulation EU 2023/2854)	✓

CONNECTION DIAGRAM CD-367

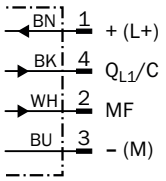

CHARACTERISTIC CURVE WTB4S-3, 180 MM

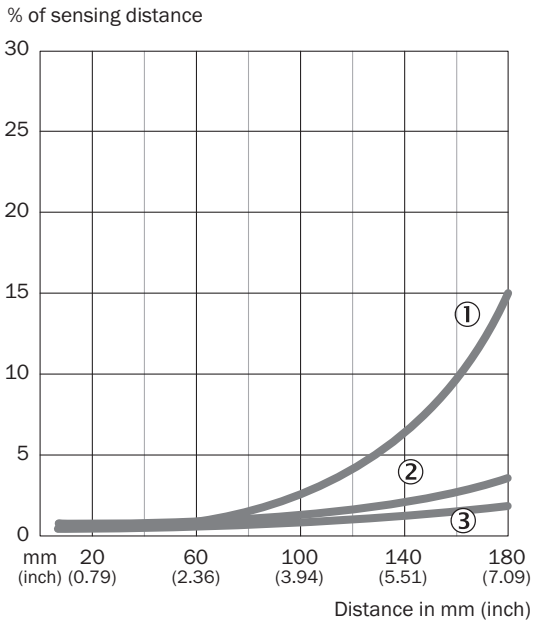

① Sensing range on black, 6% remission factor
② Sensing range on gray, 18% remission factor
③ Sensing range on white, 90% remission factor

SENSING RANGE DIAGRAM WTB4S-3, 180 MM

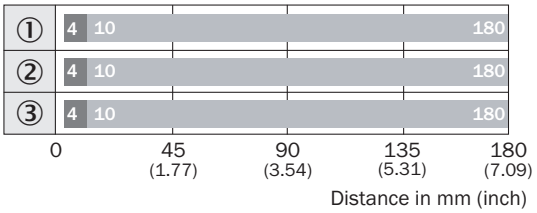

Sensing range max. Sensing range

① Sensing range on black, 6% remission factor
② Sensing range on gray, 18% remission factor
③ Sensing range on white, 90% remission factor

DIMENSIONAL DRAWING WTB4S-3V, WTF4S-3V, SINGLE TEACH-IN BUTTON

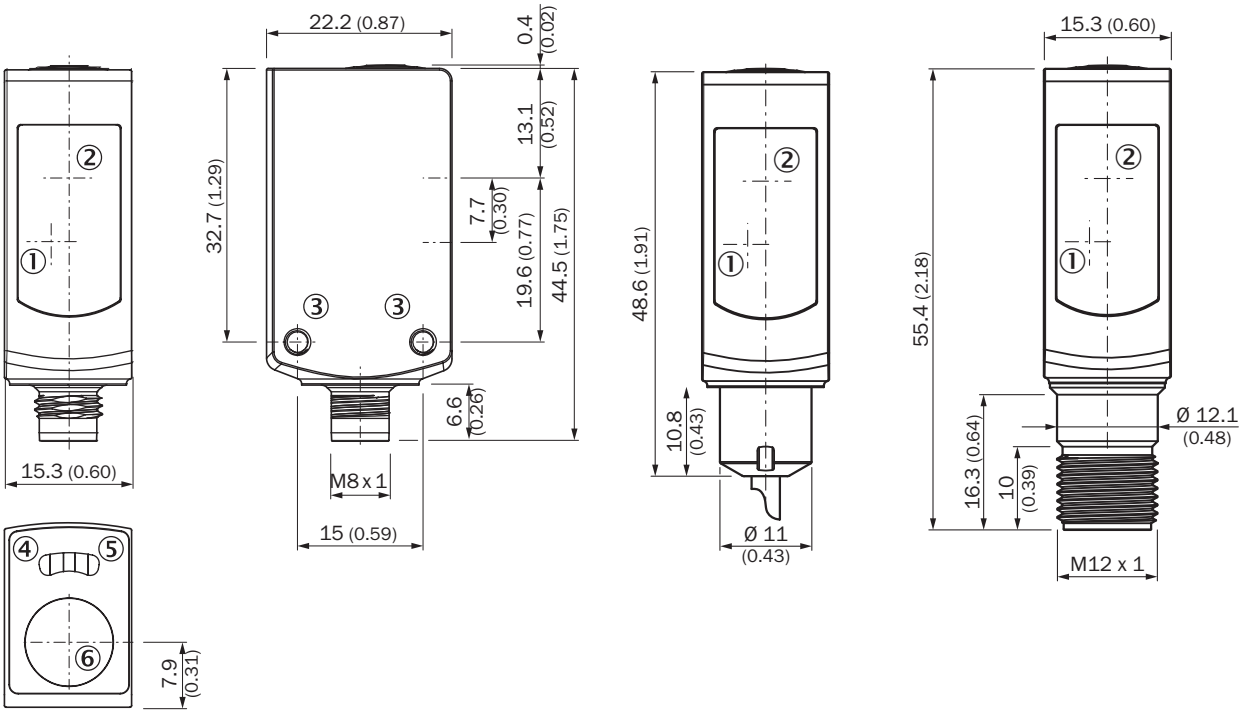

Dimensions in mm (inch)
① Center of optical axis, receiver
② Center of optical axis, sender
③ Threaded mounting hole M3
④ LED indicator yellow: Status of received light beam
⑤ LED indicator green: Supply voltage active
⑥ Teach-in button

Further information as well as suitable accessories, example applications and downloads such as CAD dimensional models, operating instructions and software can be found at www.sick.com/1097824

SICK AG
WALDKIRCH
GERMANY
SICK.COM

SICK AT A GLANCE

SICK is a leading global technology company for intelligent sensors and integrated solutions in industrial automation. Our technologies set benchmarks, making your industrial processes more efficient, safer and more sustainable – both in logistics and manufacturing operations.

SICK combines sensor intelligence with industry expertise and certified consulting services. We provide the ideal foundation for scalable as well as tailor-made automation solutions and create added value along the entire value chain. Our close partnerships with our customers are more than just a promise: Together, we optimize productivity, improve quality, protect health and safety, and help build a sustainable future. All with empathy and trust.

Since 1946, we have been developing innovative technologies with passion and a pioneering spirit. With a global network in around 40 countries, SICK has a global presence and is always close by. The company's headquarters are located in Waldkirch near Freiburg, Germany. Our customers benefit from our understanding of both local and global requirements, which enables us to deliver tailor-made solutions

SICK
Sensor Intelligence