SICK.COM

DATA SHEET

C40S-0701AA030

C4000 Basic
Safety light curtains

SICK Sensor Intelligence

Illustration may differ

SAFETY LIGHT CURTAINS

C40S-0701AA030

ORDERING INFORMATION

Type	part no.
C40S-0701AA030	1022202

Further device versions and accessories at www.sick.com/C4000_Basic

DETAILED TECHNICAL DATA

FEATURES

System part	Sender
Resolution	14 mm
Scanning range	5 m
Protective field height	750 mm
Synchronization	Optical synchronization

SAFETY-RELATED PARAMETERS

Type	Type 4 (IEC 61496-1)
Safety integrity level	SIL 3 (IEC 61508)
Category	Category 4 (EN ISO 13849)
Performance level	PL e (EN ISO 13849)
PFH_D (mean probability of a dangerous failure per hour)	$15 * 10^{-9}$ (EN ISO 13849)
T_M (mission time)	20 years (EN ISO 13849)
Safe state in the event of a fault	At least one OSSD is in the OFF state.

FUNCTIONS

Protective operation	✓

INTERFACES

System connection	
Direction of cable connection	Straight
Conductor cross section	0.75 mm²
Permitted cable length	50 m [1]

[1] Depending on load, power supply and wire cross-section. The technical specifications must be observed.

Configuration method	Hard wired
Display elements	7-segment display

[1] Depending on load, power supply and wire cross-section. The technical specifications must be observed.

ELECTRONICS

Protection class	III (IEC 61140)
Supply voltage V_S	24 V DC (19.2 V ... 28.8 V) [1]
Residual ripple	≤ 10 % [2]

[1] The external voltage supply must be capable of buffering brief mains voltage failures of 20 ms as specified in EN 60204-1. Suitable power supplies are available as accessories from SICK.

[2] Within the limits of V_S.

MECHANICS

Dimensions	See dimensional drawing
Housing cross-section	48 mm x 40 mm
Housing material	Aluminum extruded profile
Weight	1,670 g

AMBIENT DATA

Enclosure rating	IP65 (IEC 60529)
Ambient operating temperature	0 °C ... +55 °C
Storage temperature	–25 °C ... +70 °C
Air humidity	15 % ... 95 %, Non-condensing
Vibration resistance	5 g, 10 Hz ... 55 Hz (EN 60068-2-6)
Shock resistance	10 g, 16 ms (EN 60068-2-27)

OTHER INFORMATION

Wave length	850 nm

DIMENSIONAL DRAWING ILLUSTRATION SENDER (RECEIVER MIRROR IMAGE)

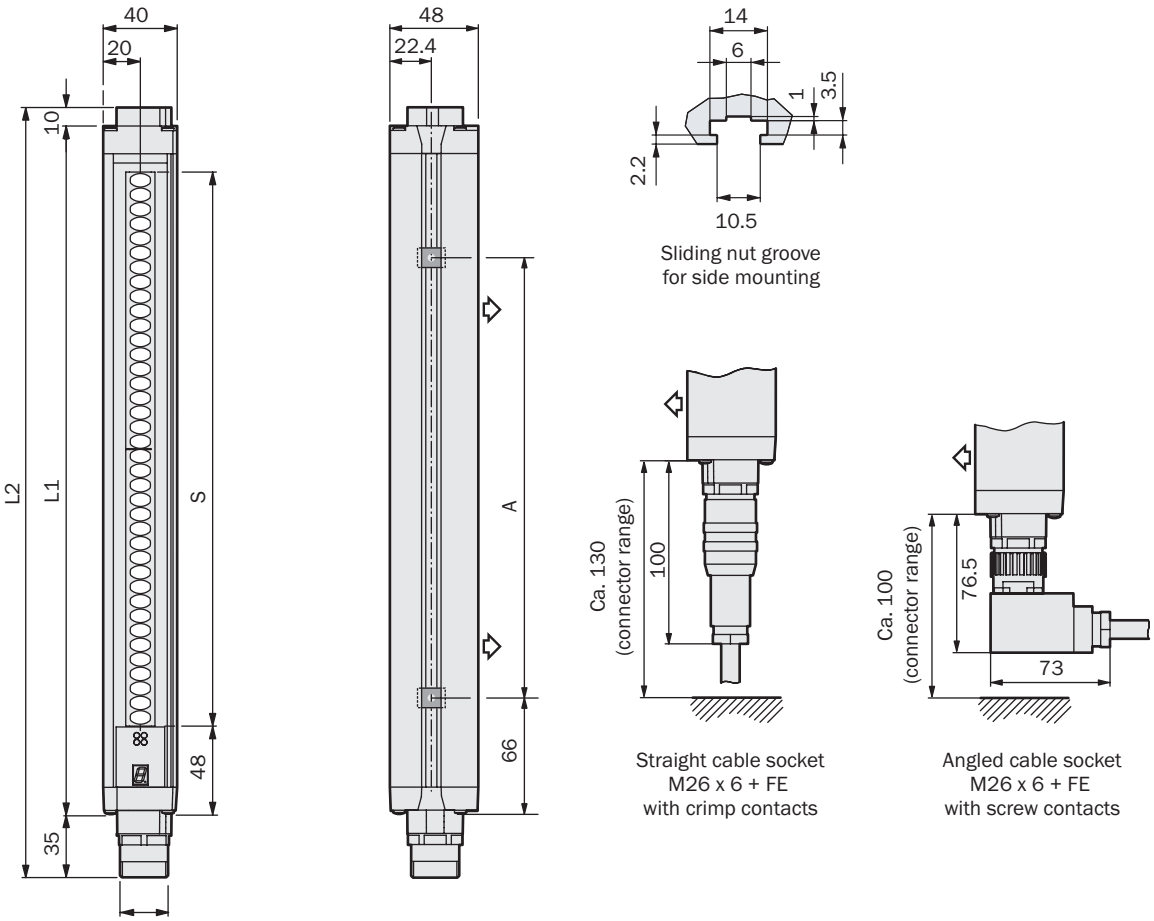

DIN 43651 plug
(M26 x 6 + FE)

Dimensions in mm (inch)

Protective field height S	L1	L2	A
300	372	417	224
450	523	568	374
600	674	718	524
750	824	869	674
900	975	1,020	824
1,050	1,125	1,170	974
1,200	1,274	1,319	1,124
1,350	1,426	1,471	1,274
1,500	1,577	1,622	1,424
1,650	1,727	1,772	1,574
1,800	1,878	1,923	1,724

Further information as well as suitable accessories, example applications and downloads such as CAD dimensional models, operating instructions and software can be found at www.sick.com/1022202

SICK AG
WALDKIRCH
GERMANY
SICK.COM

SICK AT A GLANCE

SICK is a leading global technology company for intelligent sensors and integrated solutions in industrial automation. Our technologies set benchmarks, making your industrial processes more efficient, safer and more sustainable – both in logistics and manufacturing operations.

SICK combines sensor intelligence with industry expertise and certified consulting services. We provide the ideal foundation for scalable as well as tailor-made automation solutions and create added value along the entire value chain. Our close partnerships with our customers are more than just a promise: Together, we optimize productivity, improve quality, protect health and safety, and help build a sustainable future. All with empathy and trust.

Since 1946, we have been developing innovative technologies with passion and a pioneering spirit. With a global network in around 40 countries, SICK has a global presence and is always close by. The company's headquarters are located in Waldkirch near Freiburg, Germany. Our customers benefit from our understanding of both local and global requirements, which enables us to deliver tailor-made solutions

SICK
Sensor Intelligence